THE IDEAL INSTALLATION & SERVICING MANUAL

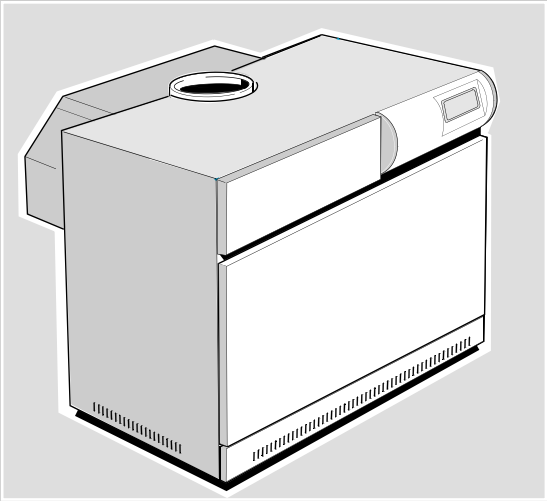

Concord
CXSi 110-180

Installers guide to commercial central heating boilers

spares & parts online
IBASIS.co.uk©

Ideal BOILERS

CONTENTS

Air Supply. 8

Boiler Assembly - exploded view. 9

Boiler Clearances. 5

Burner Assemblies - exploded views. .....
CXSi 110-160. 24
CXSi 180. 25

Casing Assembly. 13

Chimney System. 8

Commissioning. 19

Electrical Connections. 16

Electrical Supply. 8

Fault Finding. 28

Gas Safety Regulations 2

Gas Supply. 8

Hydraulic Resistance. 4

Initial Lighting. 20

Installation. 9

Mandatory Requirements. 7

Option Kits. 4

Pump. 6

Servicing. 22

Short List of Parts. 30

Static Head Requirements. 6

System Connections. 12

Ventilation. 8

Water Circulation. 4

Water Connections. 4

Water Treatment. 6

Wiring Diagrams. 18

INTRODUCTION

CONSTRUCTION

BOILER BODY

The sectional boiler body is of cast iron and is supplied with a sheet steel combustion chamber and integral draught diverter. The boiler is supplied in sectioned form for site assembly.

CASING

The casing is manufactured in stove enamelled sheet steel and is easily assembled on site.

BURNERS

The burners are of stainless steel construction.

Current Gas Safety (Installation and Use) Regulations or rules in force.

It is the law that **all** gas appliances are installed and serviced by a CORGI registered installer (identified by ❀) in accordance with the above regulations. Failure to install appliances correctly could lead to prosecution. It is in your own interest, and that of safety, to ensure that the law is complied with.

The **Concord CXSi 110-180 range** of boilers has been tested and certified by British Gas to prEN656 for use with ***natural gas only.***

Note. ***Concord CXSi 110 - 180*** *boilers are intended for use as COMMERCIAL BOILERS and are NOT certified for use in domestic applications. A domestic installation is defined as an installation where the boiler takes its combustion air from a living space or from a room directly or indirectly connected with the living space. It is important, therefore, that no external control devices - e.g. flue dampers, economisers etc., are directly connected to this appliance unless covered by these Installation and Servicing Instructions or otherwise recommended by* **Caradon Plumbing Limited** *in writing. If in doubt please enquire.*

Any direct connection of a control device not approved by **Caradon Plumbing Limited** *could invalidate the British Gas Certification, the normal appliance warranty and could also infringe the Gas Safety Regulations. Table 1, Table 2 and the descriptive notes which follow contain all the essential data likely to be required by the installer.*

GAS CONTROLS

The boiler lights at Low rate (approximately 60% of Full rate) by direct burner ignition. After about 3 minutes the boiler goes to High rate and will continue at High rate until the thermostat sensor set point is reached. The boiler will then drop to the Low rate; if the temperature continues to rise the boiler will go Off; if the temperature falls the boiler will revert to High rate.

ELECTRICAL CONTROLS

The boiler is supplied with 2 printed circuit boards; Board S4561B1047 is the ignition board containing the flame-proving logic; Board W4115A1020 contains the electronic thermostat and pump overrun timer. A preset overheat thermostat is also provided. The mains voltage supply is via a terminal plug in connection at the control box. The control box displays neons indicating boiler status as follows:

- Boiler on
- Lockout
- Overheat

An anti-cycle delay is built in to the controls to prevent rapid cycling.

CAUTION. To avoid the possibility of injury during the installation, servicing or cleaning of this appliance, care should be taken when handling edges of sheet steel components.

GENERAL

Table 1 - Performance Data

Boiler			CXSi 110	CXSi 120	CXSi 140	CXSi 160	CXSi 180
Boiler Input Low Rate	Gross	kW	86.55	94.63	110.79	126.94	152.16
		Btu/h x 1000	295.31	322.88	378.02	433.12	519.17
	Nett	kW	77.98	85.26	99.82	114.37	137.10
		Btu/h x 1000	266.07	290.91	340.59	390.24	467.77
Boiler Input High Rate	Gross	kW	137.38	150.21	175.85	201.49	227.14
		Btu/h x 1000	468.75	512.50	600.00	687.50	775.00
	Nett	kW	123.78	135.33	158.44	181.55	204.65
		Btu/h x 1000	422.34	461.76	540.60	619.44	698.28
Boiler Output High Rate		kW	109.91	120.16	140.68	161.20	181.71
		Btu/h x 1000	375.00	410.00	480.00	550.00	620.00
Gas rate	High	l/s	3.63	3.97	4.65	5.33	6.01
		cu ft/h	462.10	505.20	591.50	677.70	764.00
Approx. flue gas volume	At 4.5% CO_2 & 100°C	cu m/sec	0.114	0.125	0.146	0.167	0.189
	At 4.5% CO_2 & 212°F	cu ft/min	242	264	309	354	399
Burner setting pressure	High	mbar	10.8	11	11	10.8	11
		in.w.g.	4.3	4.3	4.3	4.3	4.3
	Low	mbar	4.3	4.3	4.3	4.3	5
		in.w.g.	1.7	1.7	1.7	1.7	2.0

Note. *To obtain gas consumption in l/s divide gross heat input (kW) by a calorific value of 37.8 (MJ/m³)*

Table 2 - General Data

Boiler		CXSi 110	CXSi 120	CXS i 140	CXSi 160	CXSi 180
Number of sections		7	7	8	9	10
Flow tappings	Rc	2 x 2				
Return tappings	Rc	2 x 2				
Maximum static head	m. (ft)	61.0 (200)				
Maximum pressure	bar (psi)	6.0 (87)				
Gas inlet connection	Rc	1 1/2				
Minimum dynamic gas pressure	mbar	17.5	17.5	17.5	17.5	17.5
	in.	7	7	7	7	7
Electricity supply		230 Volts - single phase, 50 Hz, fuse 5 A				
Nominal flue size (to BS. 835)	mm	250	250	250	250	300
	in.	10	10	10	10	12
Diverter outlet socket internal diameter	mm	288	288	288	288	344
	in.	11.3	11.3	11.3	11.3	13.5
Length of burner bars (overall)	mm	535	535	535	535	535
	in	21.1	21.1	21.1	21.1	21.1
Approximate dry weight	kg	520	520	587	654	721
	lb.	1146	1146	1294	1442	1590
Water content	litre	53	53	60	68	76
	gal.	11.7	11.7	13	15	17

FROST PROTECTION

Frost protection is incorporated in the boiler as long as there is a permanent Live supply wired to Terminal L1 on the terminal plug-in connection at the control box and the boiler thermostat knob is not switched to Off.

If the temperature sensed by the boiler thermostat falls to about 5^{0}C the boiler will fire until the temperature reaches 18^{0}C.

Note that this is designed to protect the boiler and may not necessarily protect remote parts of the system.

The mains voltage supply is via a terminal plug-in connection at the control box.

OPTION KITS

Remote Indication Kit
This kit gives the facility of remote indication of boiler status.

Pressure Gauge Kit
A pressure gauge kit is available.

DUTY

The range of boilers is suitable for: Combined indirect pumped domestic hot water ***and*** central heating systems; Independent indirect pumped domestic hot water ***or*** central heating systems.

Fully pumped systems may be open vented or sealed.

The range of boilers is NOT suitable for:

1. Gravity DHW systems.
2. Gravity heating systems.
3. Direct domestic hot water supply.

WATER CIRCULATION SYSTEM

Due to the compact nature of the boiler the heat stored within the castings at the point of shutdown of the burner must be dissipated into the water circuit in order to avoid the overheat thermostat tripping. In order to allow pump operation after burner shutdown the boiler control box incorporates a pump overrun facility which operates for approximately 6 minutes after the burner shuts down and, in order to make use of this, the pump must be wired to the appropriate terminal L2 (pump) in the boiler control box.

1. The minimum flow rate as given in Table 4 must be maintained whenever the boiler is firing and during the pump overrun period.
2. During the period of pump overrun there must be an open circuit of adequate water volume and/or load. The minimum size of this circuit is given by the use of Graph 1.

   Examples shown on Graph 1

   a. For the **CXSi 110** and **CXSi 120** the minimum circuit during pump overrun could be a load of 7 kW with a volume of 42 litres or any other combination given by the relevant line.

   b. For the **CXSi 180** the minimum circuit during pump overrun could be a load of 9 kW with a volume of 70 litres or any other combination given by the relevant line.

   The above circuit capacity during pump overrun may be achieved either by provision of an adequate bypass circuit or by ensuring that a zone of suitable size is open for circulation during this period by relevant control of zone valves or pumps.

   The wiring diagrams in Frames 16,17 &18 illustrate the control methods for achieving the above.

3. Pump selection should take account of the hydraulic resistance given in Graph 2.

1 WATER CONNECTIONS

Flow and return connections are 2" BSP.

The distributor tube must be fitted into the return connection. The flow header must be fitted in the flow pipe.

The open vent must be brought to either the 1 1/2" BSP tapping on the flow header or to the unused 2" BSP tapping at the top rear of the boiler.

The cold feed may be brought to the LH front bottom tapping in order to avoid excessive surging or pumping over. The unused bottom rear tapping must not be used for the cold feed pipe as it is practically blocked by the distributor tube.

Safety Valve

A safety valve must be sized and fitted in accordance with BS. 6644 for every type of system. The valve should be set at 0.7 bar (10 lb/in.^{2}) above the operating pressure in the boiler. The maximum safety valve setting is 0.7 bar (10 lb/in.^{2}) above the maximum design operating pressure of 6.0 bar (87 lb/in.^{2}).

Cold Feed/Open Vent

The independent cold feed and the open vent must comply with BS. 6644 and be of the following minimum size.

Boiler Size	Cold Feed	Open Vent
CXSi 110	1"	1 1/4"
CXSi 120	1"	1 1/4"
CXSi 140	1"	1 1/4"
CXSi 160	1 1/4"	1 1/2"
CXSi 180	1 1/4"	1 1/2"

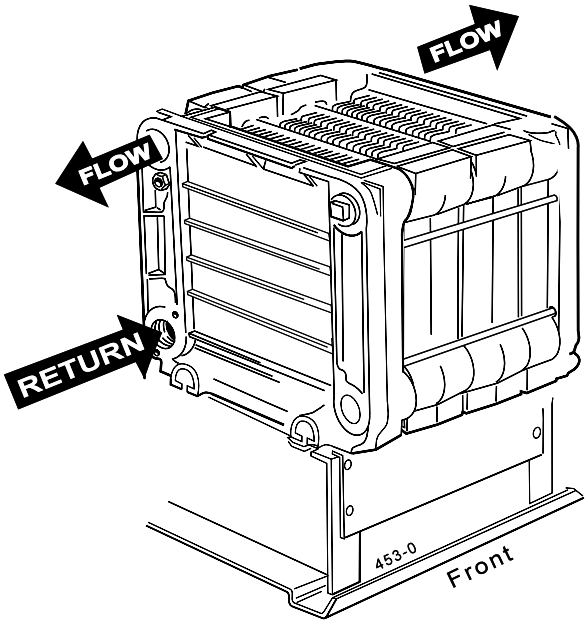

Graph 1 - Heat Load / Water Volume

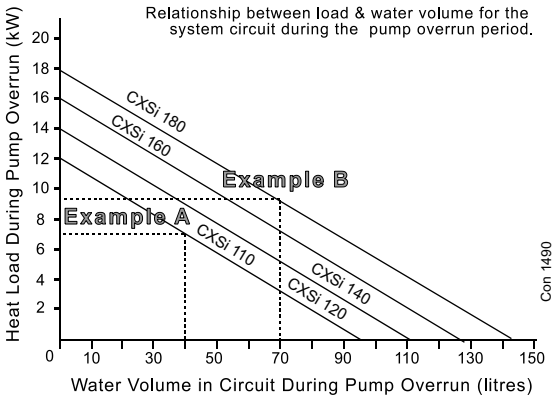

Graph 2 - Hydraulic Resistance

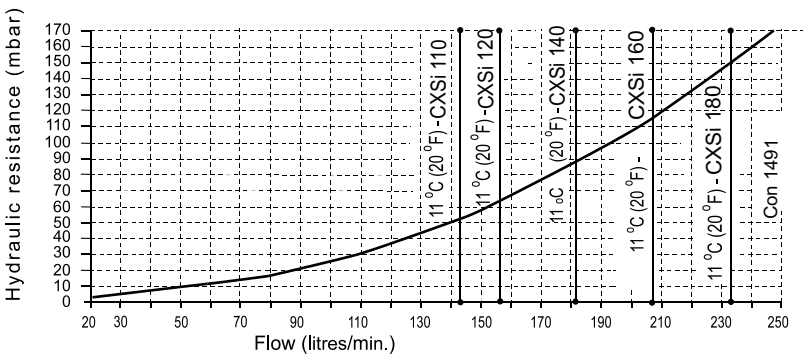

2 CLEARANCES & DIMENSIONS

Table 3

Boiler Size		CXSi 110	CXSi 120	CXSi 140	CXSi 160	CXSi 180
Front clearance	mm (in)	700 (27 1/2)				
Rear clearance	mm (in)	200 (8)				
Side clearance	mm (in)	100 (4) - not including clearance for side fitted flow header				
Dimension **A**	mm (in)	1036 (40 3/4)	1036 (40 3/4)	1036 (40 3/4)	1086 (42 3/4)	1140 (45)
Dimension **B**	mm (in)	175 (7)	175 (7)	175 (7)	197 (7 3/4)	250 (10)
Dimension **C**	mm (in)	1107 (43 3/4)	1107 (43 3/4)	1230 (48 1/2)	1353 (53 1/4)	1476 (58 1/8)
Dimension **D**	mm (in)	816 (32 1/8)	816 (32 1/8)	939 (37)	1062 (42 3/4)	1185 (46 5/8)
Dimension **E**	mm (in)	553 (21 3/4)	553 (21 3/4)	615 (24 1/4)	676 (26 5/8)	738 (29)
Dimension **F**	mm (in)	220 (8 5/8)	220 (8 5/8)	220 (8 5/8)	220 (8 5/8)	320 (12 1/2)

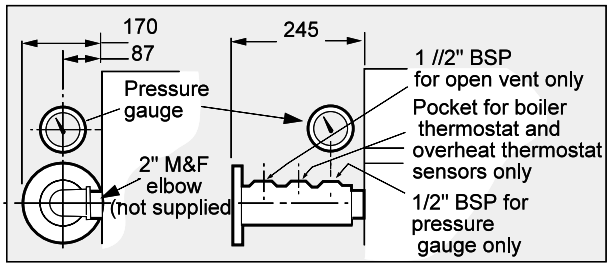

Detail of flow header position options for either left or right hand side of boiler

POSITION OF BOILER

Minimum clearances required from walls or other fixed objects to allow for the free access of combustion air are shown in Table 3 above.

Any combustible material adjacent to the boiler and its flue system must be so placed or shielded as to ensure that its temperature does not exceed 65 °C (150 °F).

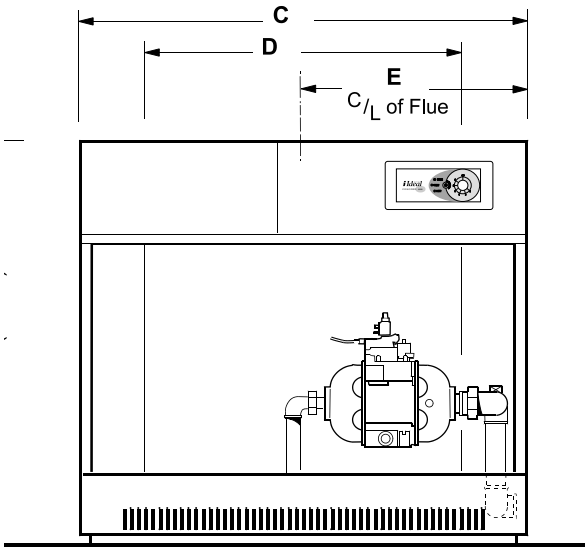

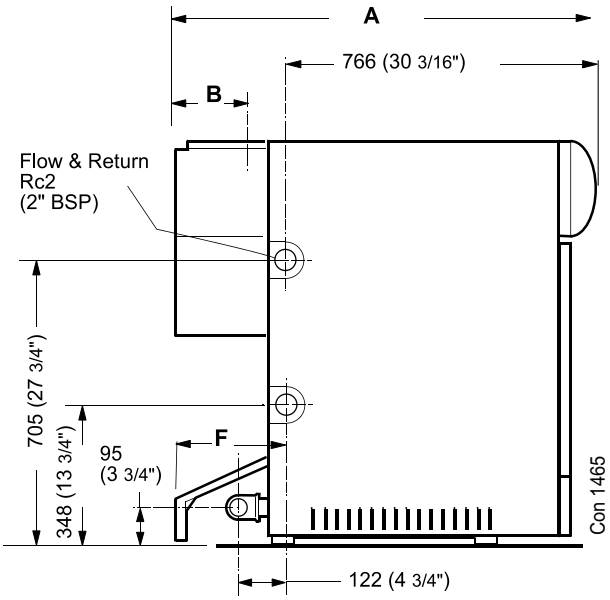

PUMP POSITIONS

Whenever practically possible the circulating pump(s) should be positioned so that it pressurises the system being served. The vertical distance between the pump(s) and any cold feed and expansion cistern MUST comply with the pump manufacturers requirements, in order to avoid cavitation. These requirements override the information given in Frame 3 if the static head required for the pump(s) exceeds that required for the boiler.

MINIMUM FLOW OF WATER - Refer to Table 4

The system design must provide for an adequate flow rate through the boiler at all times when the boiler is firing. The minimum flow rate should correspond to a temperature difference across the boiler flow and return of 35°C (63°F), assessed at catalogue rating.

Table 4 - Flow rates for fully pumped systems

Boiler	Minimum flow rates for a temperature difference of 35°C (63°F)	
	l/s	g.p.m.
CXSi 110	0.75	9.9
CXSi 120	0.82	10.8
CXSi 140	0.96	12.7
CXSi 160	1.10	14.6
CXSi 180	1.24	16.4

WATER TREATMENT FOR HOT WATER AND HEATING BOILERS

There is a basic need to treat the water contained in all heating and indirect water systems, particularly open vented systems. It is assumed, incorrectly, that because boilers are operating in conjunction with what is apparently a closed circuit an open vented system will not, under normal circumstances, allow damage or loss of efficiency due to hardness salts and corrosion once the initial charge of water has been heated up a few times.

1mm of lime reduces the heat transfer from metal to water by 10%.

In practice the deposition of these salts is liable to cause noises from the boiler body or even premature boiler failure. Corrosion and the formation of black iron oxide sludge will ultimately result in premature radiator failure.

Open vented systems are not completely sealed from the atmosphere if proper venting and expansion of system water is to be achieved. The same tank is used to fill the system with water and it is through the cold feed pipe that system water expands into the tank when the boiler passes heat into the system. Conversely, when the system cools, water previously expanded is drawn back from the tank into the system, together with a quantity of dissolved oxygen.

Even if leakage from the heating and hot water system is eliminated there will be evaporation losses from the surface of the tank which, depending upon ambient temperature, may be high enough to

3 OPEN VENTED SYSTEMS - minimum static head requirements

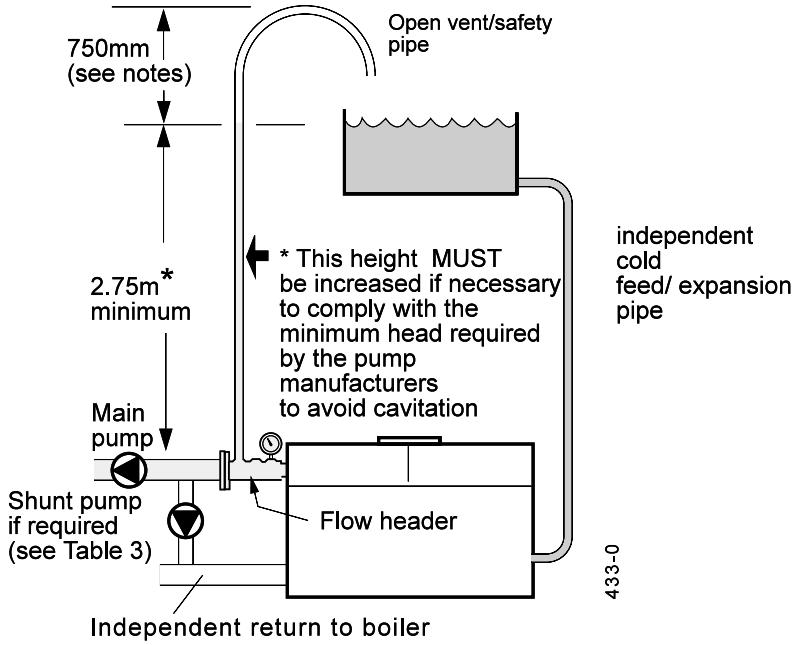

Note. *This diagram does not show safety valves, water flow switches, etc., necessary for the safe operation of the system.*

Particular reference should be made to BS. 6644: Section 2; Subsection 10 and Guidance note PM5 "Automatically controlled steam and hot water boilers" published by the Health and Safety Executive.
The information and guidance given below is not intended to override any requirements of either of the above publications or the requirements of the local authority, gas or water undertakings.

Other British Standards applicable are BS.5422 and BS.6700.

The information provided is based on the following assumptions:

1. The open vent MUST be brought to either the 1 1/2" BSP tapping on the flow header provided or to the unused 2" BSP flow tapping at the top rear of the boiler.
2. An independent cold feed/expansion pipe connection is made to the LH lower front connection. Cold feed/expansion pipe connections made to the pumped system return will result in an increase in the static head requirement, caused by the additional resistance of the distributor tube. Surging may also increase.
3. The maximum flow rate through the boiler is based on a temperature difference of 11°C at full boiler output and the circulating pump is positioned in the flow to the system.
4. The boiler is at the highest point of circulation in the system. Systems designed to rise above the boiler flow tappings will automatically require a minimum static head higher than that shown.
5. The position of the open vent/safety pipe above the expansion cistern water level is given as a guide only. The final position will depend upon the particular characteristics of the system. Pumping over of water into the expansion cistern must be avoided.

evaporate a large portion of the system water capacity over a full heating season.

There will always be corrosion within a heating or hot water system to a greater or lesser degree, irrespective of water characteristics, unless the initial fill water from the mains is treated. Even the water in closed systems will promote corrosion unless treated.

For the reason stated **Caradon Plumbing Limited** strongly recommend that when necessary the system is thoroughly cleaned, prior to the use of stable inhibitor, which does not require continual topping up to combat the effects of hardness salts and corrosion on the heat exchangers of the boiler and associated systems.

Caradon Plumbing Limited advise contact directly with specialists on water treatment such as:

Fernox Manufacturing Co. Ltd., Tandem House, Marlowe Way Croydon. Surrey CRO 4XS Tel 0870 5601 5000	or	Sentinel Division, Betz Dearborn Ltd., Widnes, Cheshire, WA8 8UD Tel. 0151 424 5351.

SAFE HANDLING OF SUBSTANCES

Care should be taken when handling the boiler insulation panels, which can cause irritation to the skin. No asbestos, mercury or CFCs are included in any part of the boiler.

INSTALLATION REQUIREMENTS

The appliance must be installed by a CORGI registered installer, identified by ❀.

The installation of the boiler must be in accordance with the relevant requirements of the Gas Safety Regulations, current I.E.E. (BS.7671) Regulations, Model Water Bye-laws, local water authority bye-laws and it should also comply with any relevant requirements of the local gas supplier, local authority and the relevant British Standard Codes of practice and building regulations.

Limitations of Intended Operating Environment

These appliances are NOT suitable for installation where they will be exposed to the elements.

A boiler room shall be constructed or adapted to meet the requirements of BS 6644.

The maximum ambient temperature is 32 °C at 1.5 metres from the floor with a maximum humidity of 90% RH.

FOR SMALL PIPE INSTALLATIONS;

BS. 6891: Installation of low pressure pipework

FOR LARGE PIPE INSTALLATIONS;

British Gas Publication:

IGE-UP-1: Purging Procedures of Non-domestic Gas Installations. Soundness Testing Procedures for Industrial and Commercial .

IM11: Flues for Commercial and Industrial Gas Fired Boilers and Air Heaters.

Gas Installations

IGE-UP-2: Guidance notes on the Installation of Gas Pipework, Boosters and Compressors in Customer's Premises Equal to or Greater than 25mm (Non-domestic).

BS.6644: Installation of Gas Fired Hot Water Boilers 60kW to 2MW.

BS. 6880 Pt1-3. Water Supply

CP342:2: Centralised Hot Water Supply.

Model Water Bye-laws

Manufacturers notes must not be taken, in any way, as overriding statutory obligations.

The appliance must be installed in a room separated from living rooms and provided with appropriate ventilation direct to the outside - see Table 5.

4 SEALED (PRESSURISED) SYSTEMS

Working pressure 6.0 bar maximum.

Particular reference should be made to BS. 6644: Section 2; Subsection 11 and Guidance note PM5 "Automatically controlled steam and hot water boilers" published by the Health and Safety Executive.

The information and guidance given below is not intended to override any requirements of either of the above publications or the requirements of the local authority, gas or water undertakings.

In general commercial closed pressurised systems are provided with either manual or automatic water make up.

On both instances it will be necessary to fit automatic controls intended to protect the boiler, circulating system and ancillary equipment by shutting down the boiler plant if a potentially hazardous situation should arise.

Examples of such situations are low water level and operating pressure or excessive pressure within the system. Depending on circumstances, controls will need to be either manual or automatic reset. In the event of shutdown both visual and audible alarms may be necessary.

Pressure vessels used must comply with BS. 4814 and must be sized on the basis of the total system volume and initial charge pressure.

Initial minimum charge pressure should not be less than 0.5 bar (7.2 psi) and must take account of the static head and specification of the pressurising equipment. The maximum water temperatures permissible at the point of minimum pressure in the system are specified in Guidance Note PM5.

When make up water is not provided automatically it will be necessary to fit controls which shut down the plant in the event of the maximum system pressure approaching to within 0.35 bar (5 psi) of the safety valve setting.

Other British Standards applicable to commercial sealed systems are:-

BS. 6880: Part 2
BS. 1212
BS. 6281: Part 1
BS. 6282: Part 1
BS. 6283: Part 4

FOUNDATION

The boiler must stand on a non-combustible floor (i.e. concrete or brick) which must be flat, level and of a suitable load bearing capacity to support the weight of the boiler (when filled with water) and any ancillary equipment.

If the boiler is mounted on a plinth then the dimensions must exceed the plan area of the boiler by at least 75mm on each side.

VENTILATION

Safe, efficient and trouble-free operation of conventionally flued gas boilers is vitally dependent on the provision of an adequate supply of fresh air to the room in which the appliance is installed. Ventilation by grilles communicating directly with the outside air is required at both high and low levels. The minimum free areas of these grilles must be according to the following scale:

Table 5 - Ventilation Requirements

Total input rating of boilers	Position of air vents	Air vent areas (air direct from outside)
Upto 2 MW	HIGH LEVEL	270 cm^2 plus 2.25 cm^2 per kW in excess of 60 kW total rated input
	LOW LEVEL	540 cm^2 plus 4.5 cm^2 per kW in excess of 60 kW total rated input

Position ventilation grilles to avoid the risk of accidental obstruction by blockage or flooding. If further guidance on ventilation is required then consult BS.6644.

AIR SUPPLY BY MECHANICAL VENTILATION

The supply of air by mechanical means to a space housing the boiler should be by mechanical inlet with natural or mechanical extraction. Mechanical extract ventilation with natural inlet must not be used.

Where a mechanical inlet and a mechanical extract system is applied, the design ventilation flow rates should be as in Table 4 of BS.6644.

The requirements for air supply by mechanical ventilation are given in BS.6644.

Note. *For mechanical ventilation systems an automatic control should be provided to cause safety shutdown or lockout of the boiler(s) in the event of failure of air flow in either inlet or extract fans.*

IMPORTANT.

The use of an extractor fan in the same room as the boiler (or in an adjacent communicating room) can, in certain conditions, adversely affect the safe operation of the boiler. Where such a fan is already fitted (or if it is intended to fit an extractor fan after installation of the appliance) the advice of the gas supplier should be obtained.

Tests for spillage of products from the draught diverter when the extractor fan is running and all doors and windows are shut should be carried out after installation. If spillage is detected, the area of permanent ventilation must be increased.

CHIMNEY SYSTEM

To ensure the safe and satisfactory operation of the boiler then the chimney system (which may be common or individual, in the case of twin or multiple boiler installations) must be capable of the complete evacuation of combustion products at all times. The effective height of the chimney terminal(s) above the boiler outlet(s) must ensure sufficient buoyancy to overcome the resistance of the bends, tees and runs of the flue pipe involved and shall terminate in a down draught free zone. The number of bends and lengths of horizontal flue pipe used should be kept to a minimum in order to reduce gas flow resistance.

Compliance with the recommendations made in BS.6644; British Gas publication IM 11 'Flues for Commercial and Industrial Gas Fired Boilers and Air Heaters' and the' Third Edition of the 1956 Clean Air Act Memorandum' should be strictly observed, where applicable.

The chimney design should avoid the formation of excessive quantities of condensate. For this reason it is recommended that all chimneys are insulated and lined. In the case of brick or similar structures a stainless steel rigid or flexible flue liner (grade 304/316) may be used in conjunction with a 50 mm (minimum) thick layer of vermiculite or perlite granules between the liner and the inner skin of the chimney body. Liners should be sealed at both top and bottom.

As the **Concord CXSi** range of boilers is supplied complete with an integral draught diverter, a diverter MUST NOT be fitted within the chimney system.

Drainage points positioned at the bottom of all vertical chimney sections should be provided. Drain pipes should be no less than 25 mm I.D., manufactured from acid condensate resistant material such as stainless steel and be positioned so that pipe runs and discharge points are not subject to the effects of frost and that flue gases cannot leak into the boiler room.

Care should be taken to ensure the specification of the chimney is suitable for the application by reference to the manufacturers literature. **Caradon Plumbing Limited** can offer advice on the design of suitable chimney systems.

GAS SUPPLY

If there is any doubt regarding the capacity of the gas meter, the available gas pressure, the adequacy of existing service pipes or the size required for new service pipes then the advice of the gas supplier should be requested.

Installation pipework should be fitted and tested for gas soundness in accordance in accordance with BS. 6891;

IGE-UP-1 for small installations
IGE-UP-2 for large installations.

The local gas supplier must be consulted if it is necessary to employ a gas pressure booster.

ELECTRICAL SUPPLY

WARNING. This appliance must be efficiently earthed.

A 230 V - 50 Hz mains supply is required, fused at 5 amps.

Wiring external to the appliance MUST be in accordance with the I.E.E. (BS. 7671) Wiring Regulations and any local regulations which apply.

For details of connections see Frame 14.

5 CONCORD CXSi BOILER ASSEMBLY - Exploded view

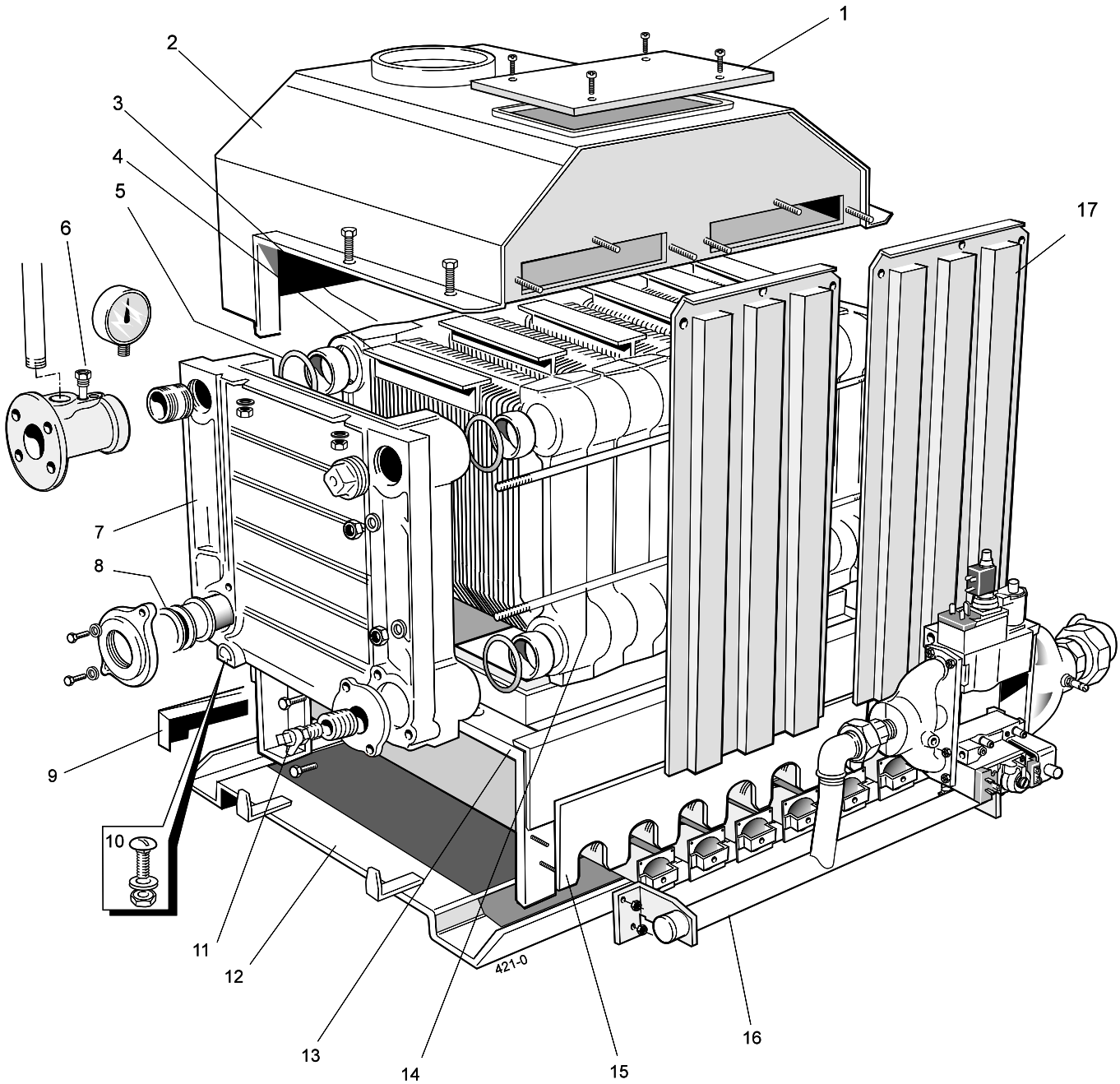

Legend

1. Cleanout cover.
2. Collector hood.
3. Middle section.
4. Flueway baffles.
5. Section alignment rings & 'O' rings.
6. Thermostat pocket.
7. End section.
8. Distribution tube.
9. Downdraught deflector.
10. Section bolt.
11. Drain cock.
12. Base plate.
13. Combustion chamber.
14. Tie rods.
15. Lightback shield.
16. Burner manifold assy.
17. NOx duct.
18. Gas cock (not shown).

6 BOILER SECTION ASSEMBLY

The site assembled boiler is supplied in the following packages:

- Combustion chamber / manifold / burner assembly.
- Platework package.
- Casing package.
- Controls box package.
- End and centre sections.

GENERAL

The installation of the boiler must be in accordance with current Gas Safety (Installation and Use) Regulations or rules in force, building regulations, I.E.E. (BS.7671) Regulations and the bye-laws of the local water undertaking. It should also be in accordance with the relevant British Standard Codes of Practice together with any relevant requirements of the local gas supplier and local authority.

ASSEMBLY

The combustion chamber should be positioned as near as possible to the installation site.

IMPORTANT.
It must be remembered that the boiler distribution tube has to be fitted into the rear return tapping of the assembled boiler before final siting.

Prior to assembling the sections it will be necessary to remove the manifold assembly and burners from the combustion chamber. To do this:

1. Undo the two M5 screws and washers securing the spark generator bracket to the combustion chamber. Undo the union securing the gas valve assembly and remove the gas valve and spark generator assembly from the boiler.
2. Undo the 4 nuts securing the burner manifold to the combustion chamber legs.
3. Undo the nuts securing the burner light back shield to the combustion chamber and lift it off.
4. Pull the whole burner assembly forward on its runners, ensuring that ***no wires are trapped,*** and remove it completely from the combustion chamber.

PREPARATION OF SECTIONS

Each section should be brushed clean on all external surfaces and any debris which may have accumulated within the sections should be removed via the bottom ports.

TOOLS REQUIRED

- Spanners
- Torque wrench
- Pozi screwdriver
- Mallet

Section Assembly - refer to the exploded view

5. Take an end section and lift it onto the combustion chamber so that the combustion chamber side panel return is inside the section rear lip.
6. Locate a slotted steel ring and an ‘O' ring seal into each of the 4 ports. It will be necessary to squeeze the steel ring slightly to enable it to be pushed fully into the recess.
7. Lift a middle section onto the combustion chamber and carefully offer it up to the end section until it engages the projecting steel rings. It may be necessary to use a mallet and hardwood block to ensure that the steel rings are pushed fully into the recessing and that the sections are butted up to each other.

   Note. *Until the final section is fitted and the tie rods fastened, the sections in the assembly are not fixed together therefore CARE MUST BE TAKEN TO PREVENT the installed sections coming apart.*
8. Repeat the assembly procedure for all of the sections until complete.
9. Fit the 4 tie rods through the holes in the sides of the end sections and fit a flat steel washer, a shakeproof washer and a nut to both ends of each tie rod. Screw up all the nuts equally, in turn and, finally, tighten them to a torque of 38-41 Nm (28-30 lb. ft).
10. For open vented systems a site test must be carried out at a hydraulic pressure equal to 1 1/2 times the design pressure given in Table 2, for a period of 30 minutes.

    Note. *If it is a sealed system the hydraulic pressure must be equal to twice the given design pressure for 30 minutes.*
11. Fit the 4 coach bolts into the lugs at the bottom of the end sections and through the hole in the retaining angle of the combustion chamber.
    Fit a flat washer and nut and secure the section assembly to the combustion chamber.

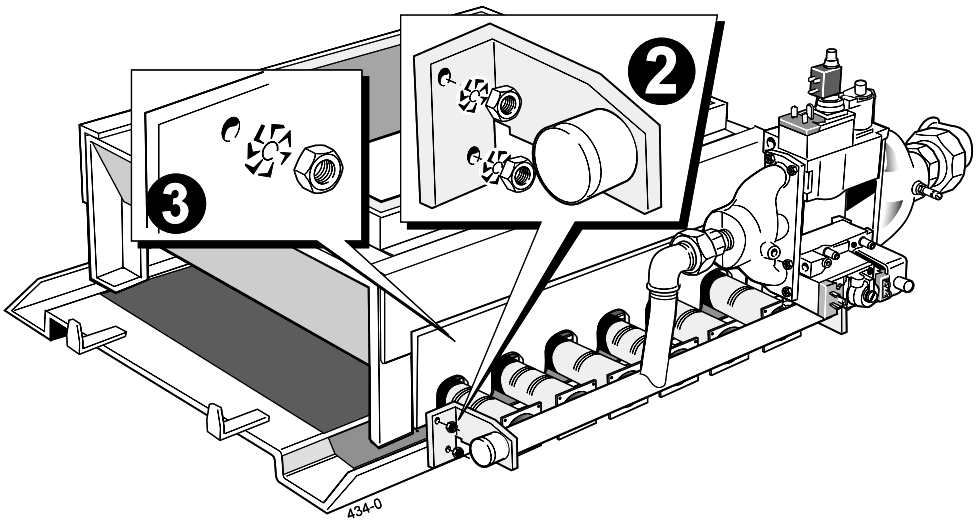

7 BOILER SECTION ASSEMBLY - continued

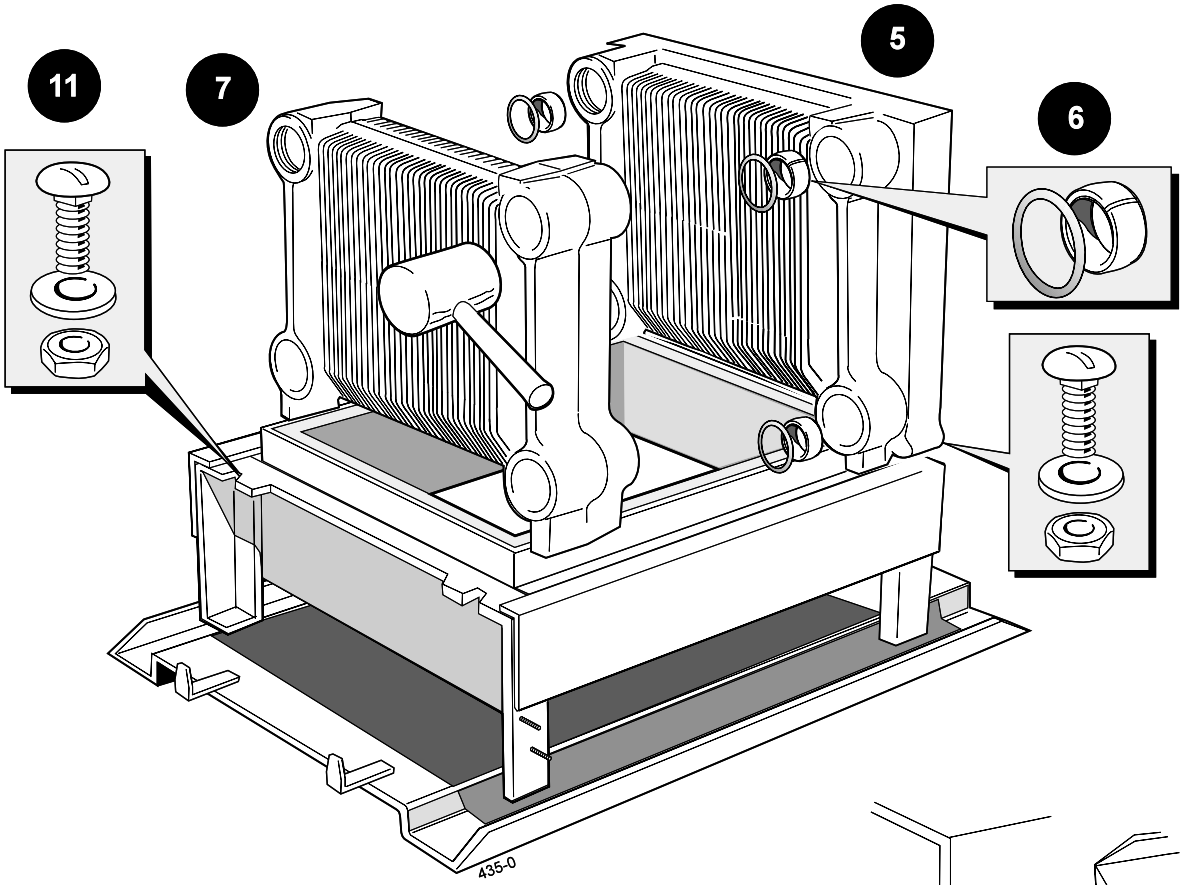

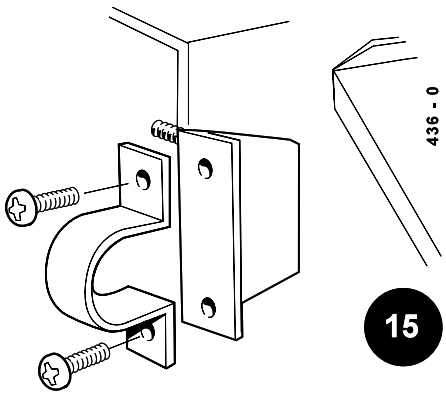

12. Fit a flueway baffle into each of the section flueways. Offer the downdraught deflector to the projecting studs at the back of the combustion chamber and fix, using the nuts and washers provided.

13. Refit the burner assembly to the combustion chamber and tighten the 4 nuts securing the burner manifold to the combustion chamber legs. Offer up the burner light back shield to the combustion chamber - with the cutout for the flame detector electrode at the LH end - and fasten, using the M5 nuts and washers.

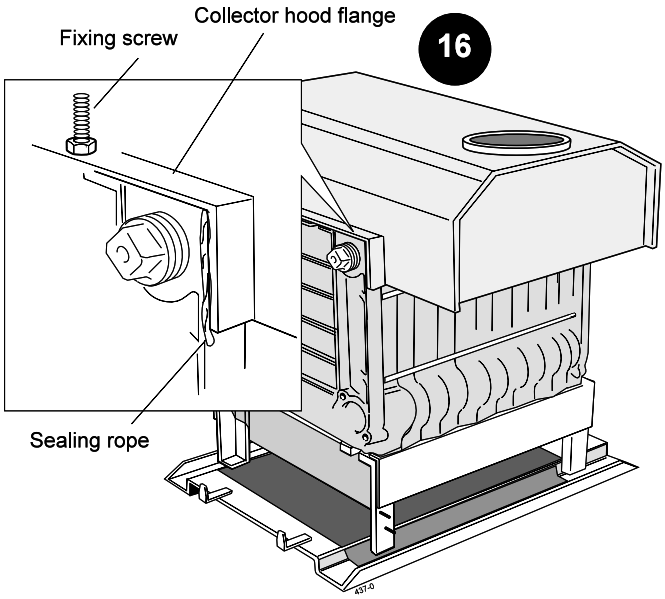

14. Fit the gas valve and spark generator assembly to the boiler by doing up the union in the gas line and by fastening the spark generator bracket to the combustion chamber using the two M5 screws and washers.

15. Fit the gas inlet pipe and retain by the semi-circular clamp, screws and washers provided. Tighten both unions and the inlet pipe retaining clamp, ensuring that the gas valve assembly is vertical.

16. To fit the collector hood align the back edge of the horizontal side returns with the rear of the section assembly and fasten down the collector hood (using the M6 screws and nuts provided) through the side fixing points.

17. Fit the NOx ducts into the burner aeration intakes and fasten to the collector hood, using the M5 elongated nuts.

8 BOILER ASSEMBLY

1. Fit the distributor tube into the selected return connection.

   Ensure that the tube flange aligns horizontally and that the 2 sealing gaskets are correctly assembled on the tube - refer to alignment notches.

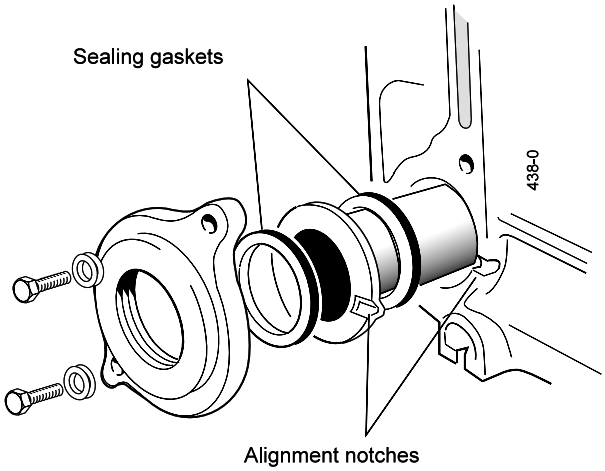

   Fit the 2" tapped flange, using the M10 x 35mm screws and washers provided.

2. Fit the blank flange to the other lower rear connection, using the gasket and M10 x 25mm screws and washers provided.

3. Fit the blank flange to the RH front connection, using the gasket and M10 x 25mm screws provided.

4. The 1 1/4" tapped flange and gasket should be fitted to the LH front connection with the reducing bush and 1/2" drain cock. If the cold feed/expansion pipe is to be brought directly to the boiler, the close taper nipple and 1 1/4" tee must be fitted so that the drain cock is horizontal. This will reduce the possibility of the drain becoming blocked by debris.

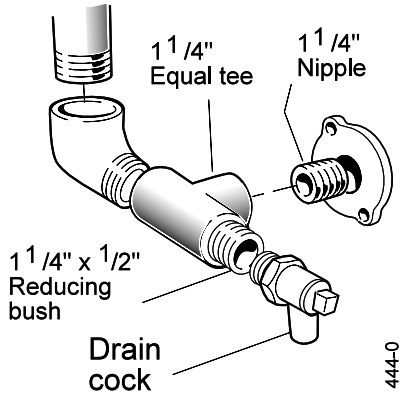

5. Complete the system connections (using suitable jointing compound) as follows:

   The cast iron flow header must be fitted in the chosen flow connection which will be either of the 2 top rear tappings. A length of 2" BSP pipe is contained in the Plateware Package for this purpose.

   Fit the flow header so that the 1 1/2" vent tapping in the header is vertical. Screw the thermostat pocket into one of the 1/2" tappings.
   The other 1/2" tapping is used for the pressure gauge provided. The flow header terminates in a 2 1/2" flange connection.
   The 1 1/2" BSP tapping on the top of the flow header is for a vent pipe ONLY and MUST NOT be used for any other purpose.

   A safety valve may be fitted in the remaining top rear tapping, in accordance with CP332:3.

   The unused top rear tapping may be used as an alternative and independent open vent / safety pipe connection. The LH front bottom tappings may be used for an independent cold feed / expansion pipe connection.

   In order to avoid air locks, reduction in pipe sizes should be made in the vertical plane or eccentric bushes used.

   Finally , plug the unused tappings, using the 2" BSP plugs supplied.

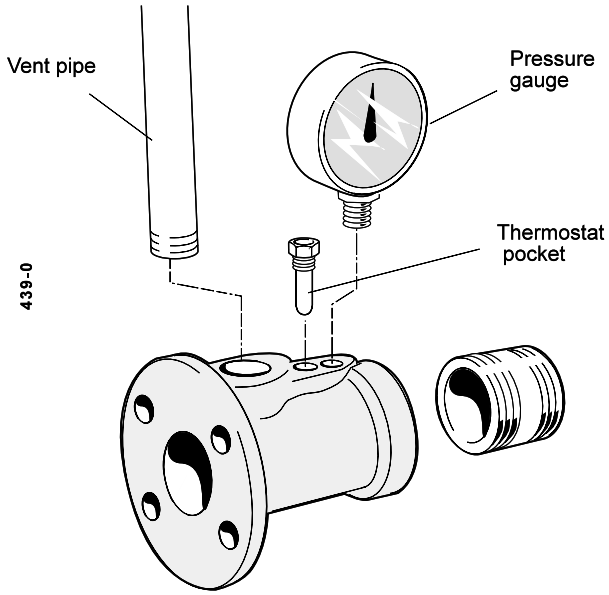

9 FLUE CONNECTION

1. Complete the secondary flue connection.

   The boiler is designed to accept flues to BS.835. If a suitable adaptor is used then flues to BS715 may be fitted.

2. Seal with an approved boiler putty.

3. A split socket should be fitted immediately above the boiler to facilitate disconnection of the flue.

10 GAS CONNECTION

Connect the gas supply to the gas inlet pipe - Table 2 gives details of the inlet pipe size.

The use of an approved gas cock and union is recommended here.

11 CASING ASSEMBLY

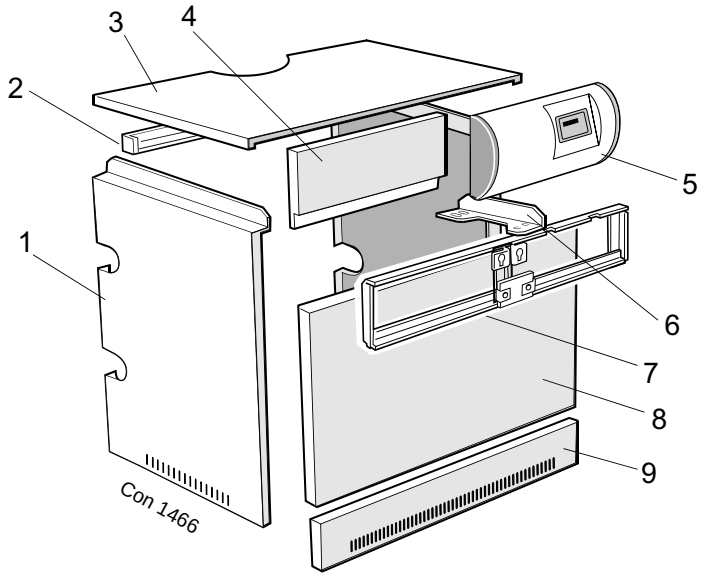

Legend

1. Side panel.
2. Supporting angle.
3. Top panel.
4. Upper front panel.
5. Control box.
6. Bracket.
7. Support frame.
8. Door panel.
9. Lower panel.

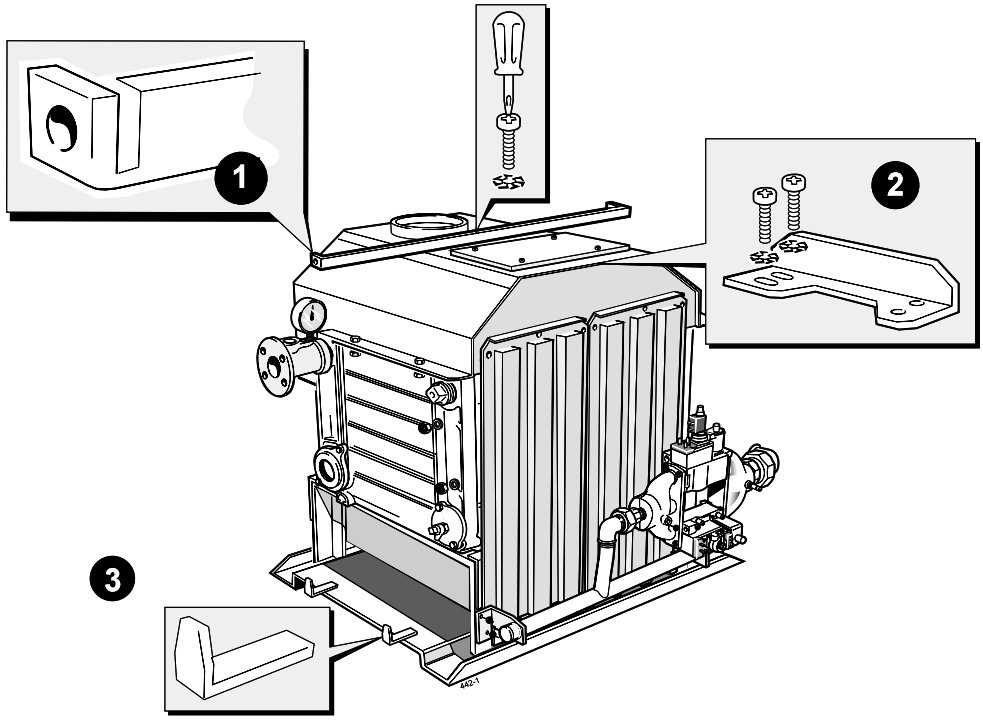

1. Fit the support angle to the collector hood and fasten, using the M5 screws and washers.
2. Fit the front fixing bracket(s) to the collector hood and fasten, using the M5 screws and washers through the slotted holes.
3. Fit one side panel over its brackets on the combustion chamber base tray and fasten to the support angle, using the M5 screw and washer.

   Repeat for the other side panel.
4. Fit the upper front support framework with the overheat thermostat at the bottom and with its green button facing to the RH side and secure to the front fixing bracket(s), using the M5 screws and washers, and to each side panel, using the No.8 screws.
5. Fit the 4 shoulder screws into the fixings at the bottom of the front return of the casing side panels.
6. Finally, ensure correct alignment by slackening and retightening the screws into the slotted holes in the front fixing bracket(s).

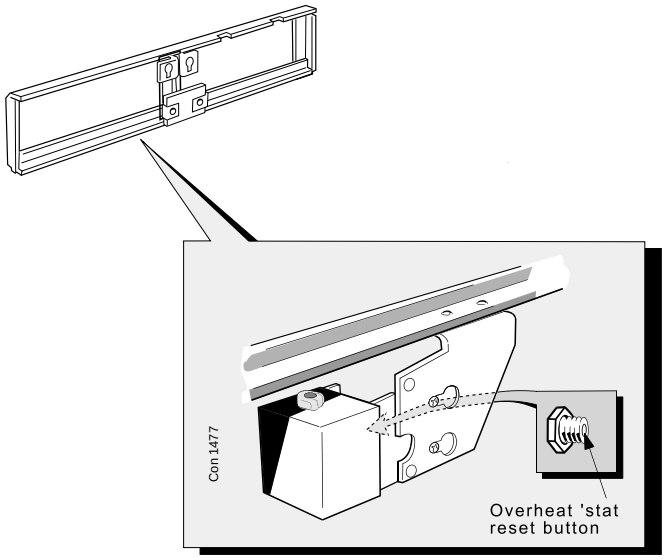

12 CONTROL BOX

1. Make the 3 electrical connections from the overheat thermostat (fixed to the upper front framework) to the terminals marked 'Limit Stat' on the electrical plug-in connector from the gas valve plug lead assembly, as follows:

   C Pink **N/O** Red **N/C** White

   Ensure that the lead is securely fastened under the strain relief clamp - but bring the earth wire outside the clamp before tightening

2. Unpack the control box. Fit the plug-in connector from the gas valve plug lead assembly to the bottom box at the back of the control box and fasten, using the M4 screws and washer.

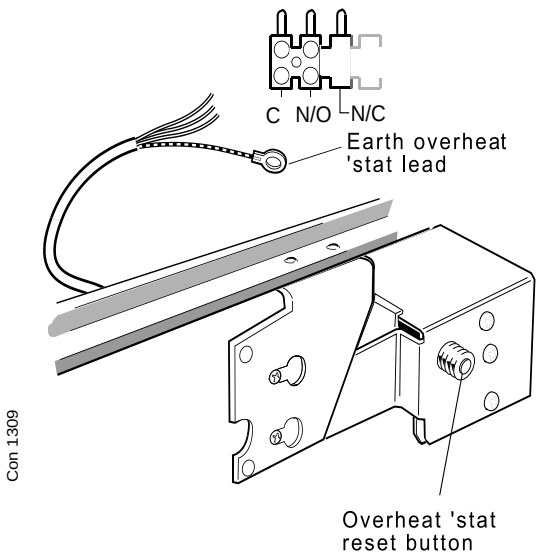

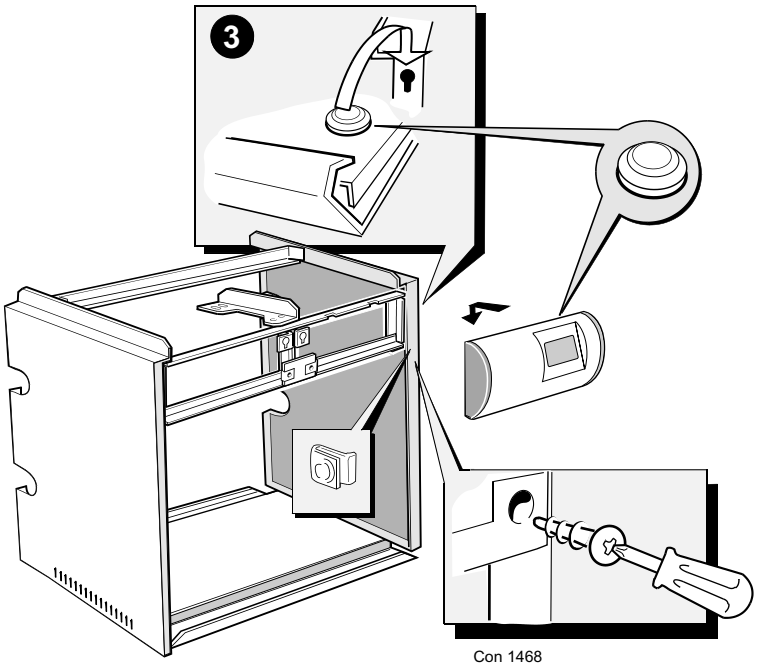

3. Fit the earth connections from the terminal plug-in connections to the appropriate earth posts on the back of the control box. Connect the earth lead prefitted to the control box back panel to the threaded hole in the casing support frame.

IMPORTANT

4. Offer up the spark generator assembly to the combustion chamber base tray and secure the bracket, using the M5 screws and washers.
   Plug the spark generator leads onto the spark electrode connections on the RH end burner - access via the side of the combustion chamber.

5. Ensure the electrical cover is correctly fastened to the spark generator.

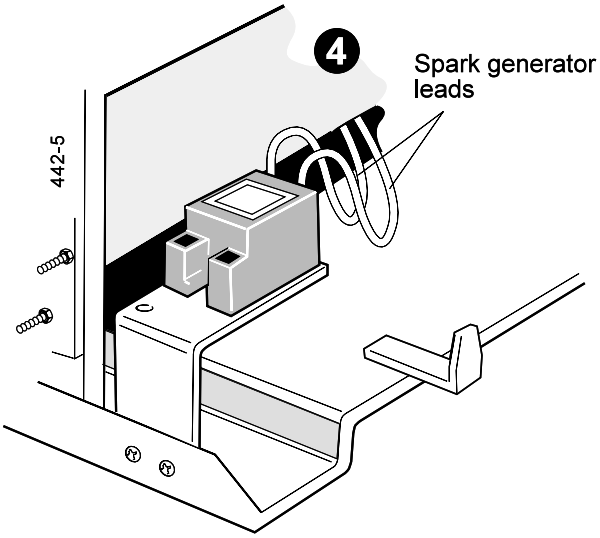

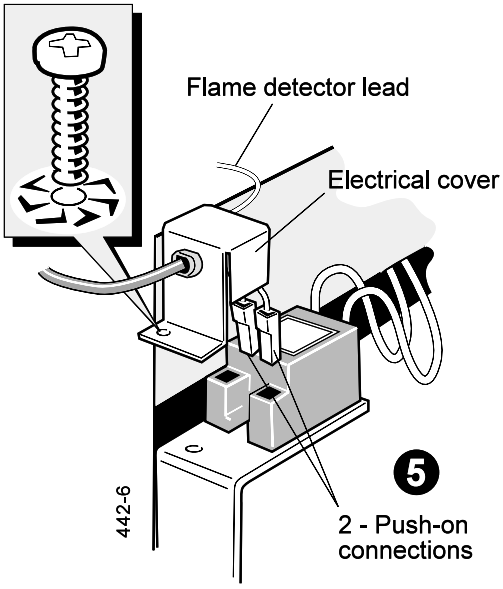

13 CONTROL BOX - continued

6. Run the flame detector lead through the clips on the front of the combustion chamber base tray and plug it into the flame detector electrode on the LH end burner. Ensure that any slack is tucked neatly into the clips then fasten the clips.

7. Unstrap the thermostat sensor lead and run both the sensor and the overheat thermostat phial through the clips on the appropriate casing side panel to the flow header, ensuring that both leads run under the support angle.

8. Secure both phials into the thermostat pocket in the flow header, using the spring clip.

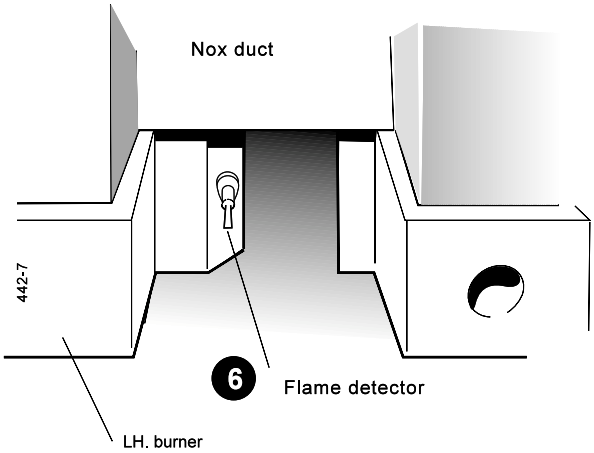

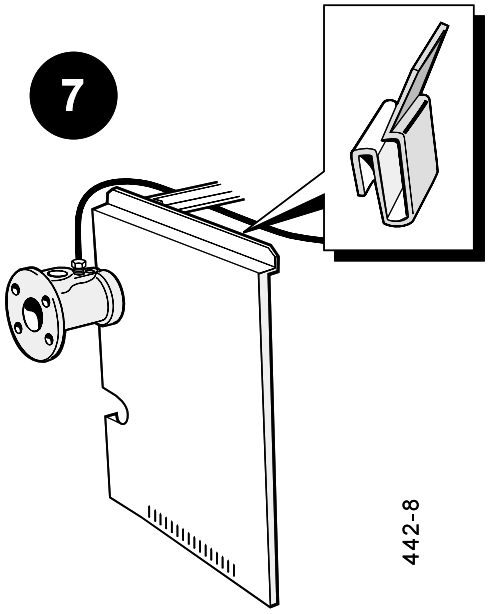

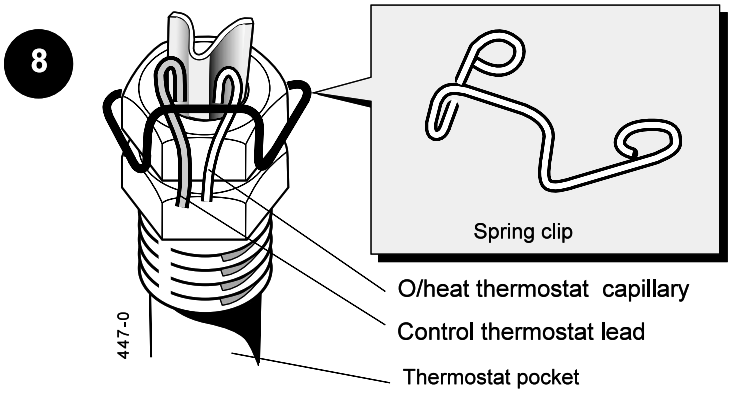

9. Fit the earth connections from the terminal plug-in connections to the appropriate earth posts on the back of the control box. Connect the earth lead prefitted to the control box back panel to the threaded hole in the casing support frame.

10. Fit the casing upper front panel with its location buttons in the slots and push down to locate. Fasten at the bottom, using the No.8 screws.

11. Fit the casing lower front panel by locating its slots over the shoulder screws in the side panels and pushing down to locate.

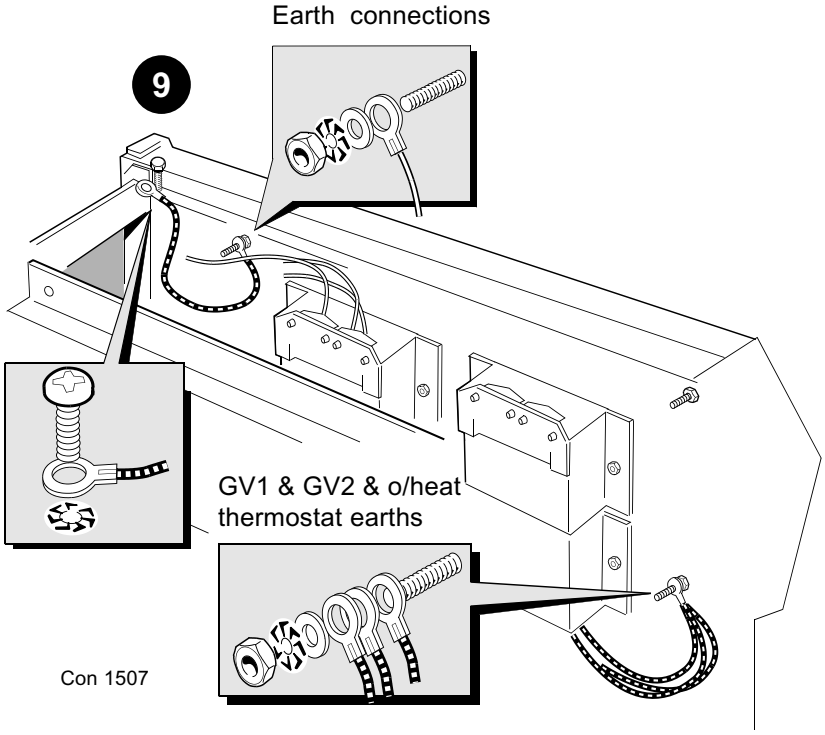

14 ELECTRICAL CONNECTIONS

Connection must be made in a way that allows complete isolation of the electrical supply - such as a double pole switch, having a 3mm (1/8") contact separation in both poles, or a plug and socket serving only the boiler and system controls. The means of isolation must be accessible to the user after installation.

This should serve only the boiler, together with its controls and pumps. The unswitched live supply, which the boiler requires to allow the pump overrun facility to operate, should be controlled by the above switched/ fused supply, but should connect from there directly to the boiler and not via any automatic time or temperature controls.

The switched live supply should be subject to control by time and temperature controls in the usual way.

The controls incorporate a pump overrun facility, which is necessary to dissipate residual heat on plant shutdown. It is essential therefore that the main pump (and shunt pump if fitted) is wired to the pump terminals marked L2, N and Earth on the plug-in terminal strip on the top box at the rear of the control box.

The main supply to the boiler must be wired to the boiler terminals L1, N and Earth on the plug-in terminal strip. This live connection must be unswitched, that is a supply not interrupted by any automatic temperature or time control, to enable the pump overrun (and the frost protection facility) to operate.

Failure to operate this procedure will result in nuisance overheat thermostat operation.

The internal wiring of the boiler control box is shown in Frame 15.

Wiring should be in four core PVC insulated cable, not less than 0.75mm^2 (24/0.2mm). All fuses must be ASTA approved to BS. 1362.

The length of the conductor between the cord anchorage and the terminals must be such that the current carrying conductors become taut before the earthing conductor, if the cable or cord slips out of the cord anchorage.

The boiler can be controlled either by volt-free external contacts connected between terminals X1 and X2 or by a switched live supply brought to X2 (after removal of the factory-fitted link between X1 and X2), accompanied in each case by a permanent live supply to terminal L1.

If a separate frost thermostat is fitted it must be wired across the time switch contacts and if frost is likely the system should be turned off using the time switch settings - all other controls including the boiler thermostat knob should be in the normal running position.

The earth connections MUST NEVER be omitted.

Wire the earths as shown in Frame 13.

All wiring between entry at the rear of the boiler and the connection box must be secured neatly under the cable clips provided.

Wiring must never be allowed to come into contact with the hot boiler body.

If a flow switch is fitted, it should be wired between F_1 and F_2 on the terminal plug-in connection on the bottom box at the rear of the control box.

Do not wire these connections in conduit up to the boiler as this will make it impossible to remove the control box for servicing or maintenance.

Finally, fit the casing top panel and push down to locate.

15 INTERNAL WIRING

LEGEND

b blue	**br** brown	**y** yellow	**y/g** yellow/green	**v** violet
bk black	**r** red	**w** white	**or** orange	**pk** pink

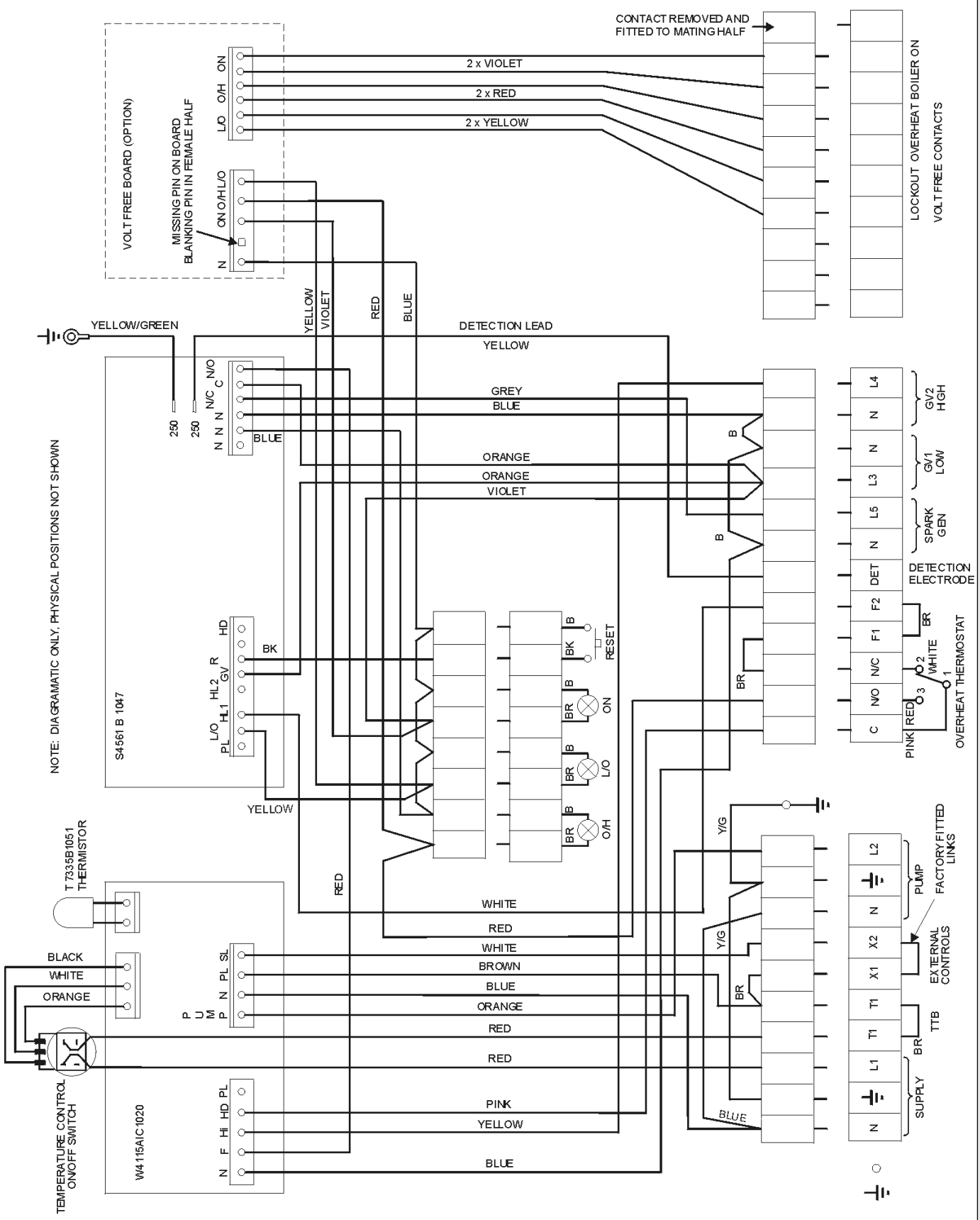

16 ZONES WITH BI-DIRECTIONAL MOTORISED VALVES

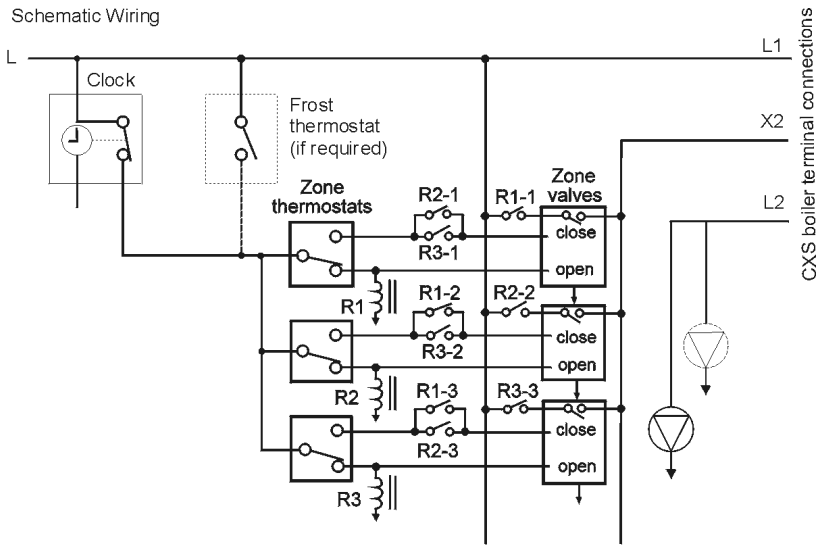

NB. Contacts shown at room temperature with power off

IMPORTANT

Terminal L2 may control the appropriate pump(s) directly, provided that the total running or starting current does not exceed 6A (resistive or inductive): if this rating would be exceeded, then appropriate switchgear must be used to control the pumps indirectly.

Three zones are illustrated but the principles may be extended as required, provided the above conditions are met. Each relay will then require as many contacts as there are zones.

Overrun

Since any zone may be the load during overrun, all zones MUST individually be able to satisfy the conditions in the foregoing paragraph. If not all zones can do this then consider other means of control, detailed on other sheets.

Normal operation

When any thermostat is satisfied while others are calling for heat, power is available via relay contacts to close the valve for that zone. When all thermostats are satisfied (also when the clock period ends) all relays will be off, so the zone valves which were open will remain open for the pump overrun period.

Pipework

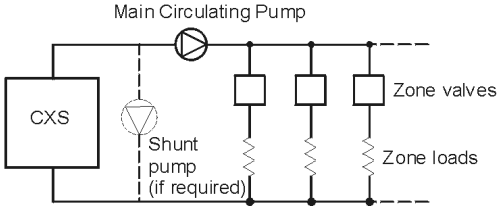

At the start of the next call for heat (or the next clock period) valves on zones not calling for heat will motor shut.

Water circulation system - refer to page 4

17 ZONES WITH INDIVIDUALLY PUMPED ZONES (3 zones shown)

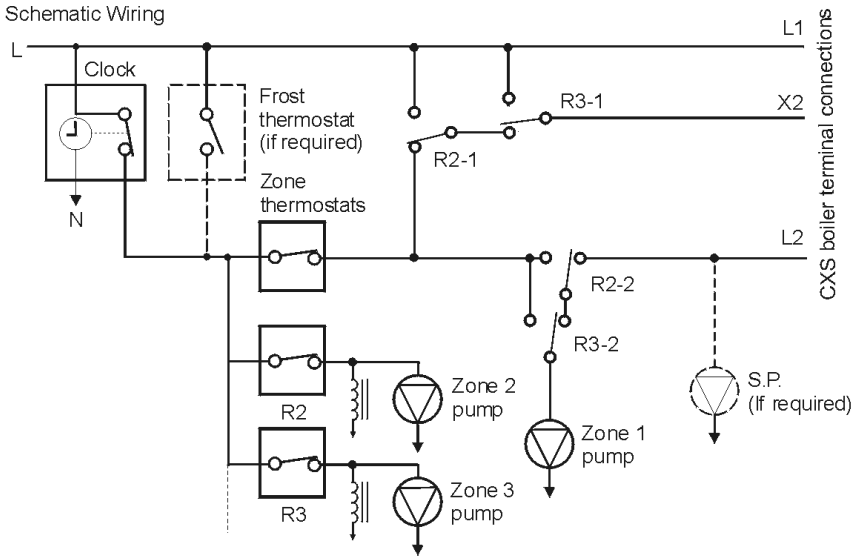

NB. Contacts shown at room temperature with power off

Pipework

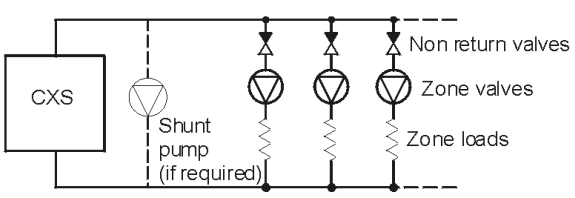

IMPORTANT

Terminal L2 may control the appropriate pump(s) directly, provided that the total running or starting current does not exceed 6A (resistive or inductive): if this rating would be exceeded then appropriate switchgear must be used to control the pumps indirectly.

Three zones are illustrated but the principles may be extended as required, provided the above conditions are met. For each zone (except Zone 1) a relay with 2 C/O contacts is required.

Overrun
During overrun periods, Zone 1 pump performs the overrun facility; this zone, therefore, must satisfy the conditions in the foregoing paragraphs and Graph 1.

Normal operation
During a call for heat on Zone 1 only, Zone 1 thermostat energises the boiler, which in turn energises Zone 1 pump from terminal L2.

During a call for heat on other zones the appropriate relay directs power to L1 to energise the boiler, at the same time ensuring that Zone 1 pump is controlled by Zone 1 thermostat.

Water circulation system - refer to page 4

18 ZONES WITH SPRING-RETURN MOTORISED VALVES

IMPORTANT

Terminal L2 may control the appropriate pump(s) directly, provided that the total running or starting current does not exceed 6A (resistive or inductive): if this rating would be exceeded then appropriate switchgear must be used to control the pumps indirectly.

Three zones are illustrated but the principles may be extended as required, provided the above conditions are met. Only one relay is required, irrespective of the number of zones.

Overrun
During overrun and dormant periods, Zone Valve 1 is held open. This zone, therefore, MUST satisfy the conditions in the foregoing paragraphs and Graph 1.

Normal operation
During a call for heat on Zone 1 only, the boiler energises via Zone 1 thermostat and the normally closed contacts of the relay.

During a call for heat on other zone(s), the relay will be energised by the auxiliary switch on the zone valves. This provides power to energise the boiler. If, in addition, Zone 1 now calls for heat, its thermostat will open Zone 1 valve via the normally open contacts of the relay.

Schematic Wiring

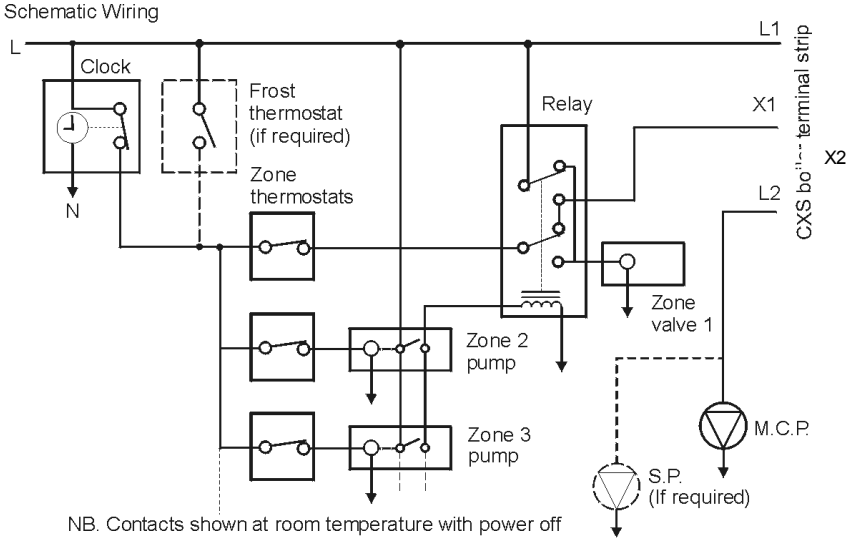

Pipework

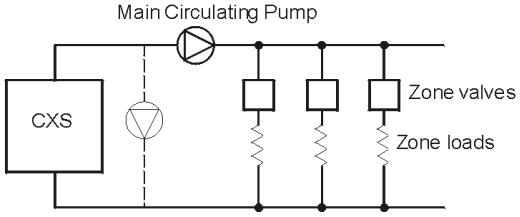

When the clock period ends, Zone valve 1 will (stay) open via normally closed relay contacts to achieve pump overrun.

Water circulation system - refer to page 4

19 COMMISSIONING AND TESTING

GENERAL

Check that all drain cocks are closed, that any stop valves fitted to the flow and return pipes are open and that the system has been filled and properly vented.

PURGING

Check that the electricity supply is switched OFF.

Remove the casing lower front panel.

Extinguish all naked lights and open all doors and windows. DO NOT SMOKE. Check that the gas supply is turned ON at the meter and open the main gas inlet cock. Loosen the union and allow air to be purged from the gas line until gas is smelled. Refer to BS 6891 or IGE-UP-1 for further details. Retighten the union .

TESTING FOR GAS SOUNDNESS

Close the gas supply cock at the meter.

Remove the screw in the inlet pressure test point, Frames 20/21, and connect a gas pressure gauge to the test point. Take particular care to ensure a gas-tight connection. Open the gas supply cock at the meter and the appliance gas cock; record the static pressure. Next, close the gas supply cock at the meter. Wait for 1 minute for temperature stabilisation then observe the pressure gauge over a period of 2 minutes.

Any leaks must be cured.

Replace all pressure test point screws.

20 INITIAL LIGHTING

1. Check that the boiler thermostat knob (1) on the control box (2) is OFF.
2. Ensure that the mains gas inlet cock (3) is open (groove in the square head in line with the gas pipe).
3. Press in and release the overheat thermostat button (4).
4. Switch on the electrical supply to the boiler.
5. Ensure that all system controls (time switch, system controls etc.) are calling for heat.
6. Turn the boiler thermostat knob (1) to position 6.
7. The boiler will light at Low rate and the Boiler-on light (5) will be illuminated. If it does not light the Lockout light (6) will be illuminated. Press in and release the Lockout button (7). The controls will reset and attempt to relight.
8. The burner will remain at Low rate for about 3 minutes before going to High rate.
9. Check all connections for gas soundness, using leak detection fluid.
10. Set the boiler thermostat knob and the system controls to the required settings.
11. Turn off the electrical supply to the boiler.

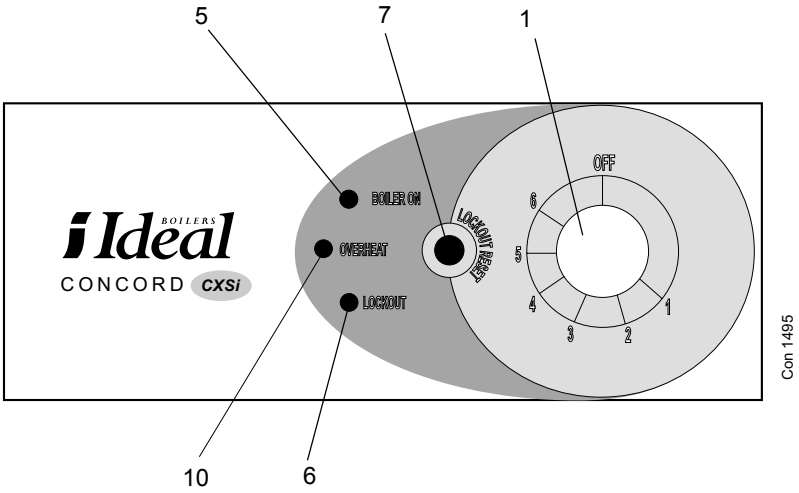

LEGEND

1. Boiler thermostat knob.
2. Control box.
3. Mains inlet gas cock.
4. Overheat thermostat .
5. Boiler on light.
6. Lockout light.
7. Lockout reset button.
8. Burner pressure test point.
9. Inlet pressure test point.
10. Overheat light.

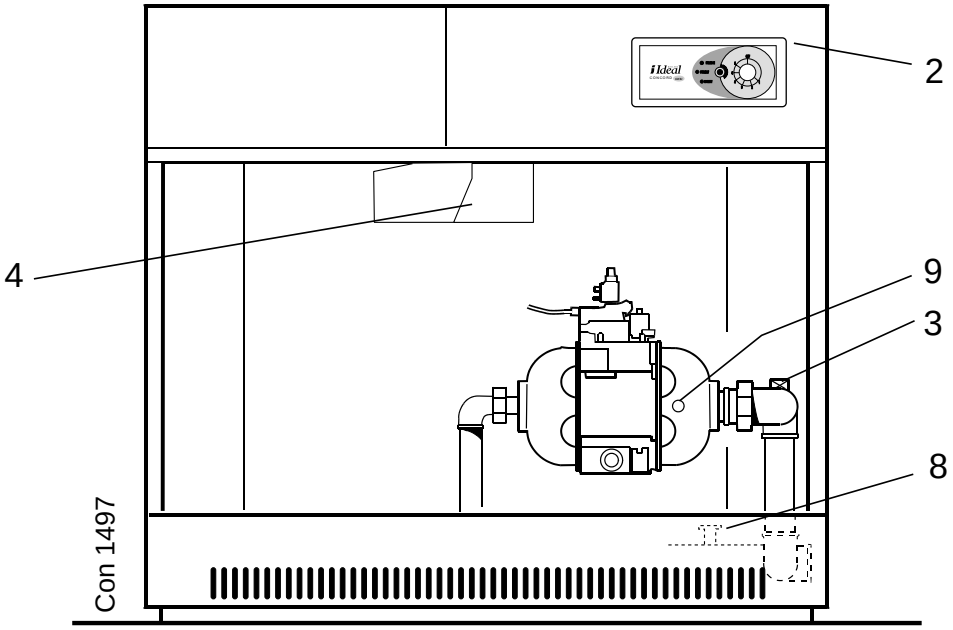

21 MANIFOLD GAS PRESSURE

The manifold setting pressure must now be checked and adjusted as necessary. *It is essential to set the High Pressure first*

Start the adjustment procedure with the system cold, on full load and with all temperature controls set to maximum to avoid thermostatic shutdown. Remove the screw in the burner setting pressure test point and connect a suitable gas pressure gauge.

Turn on the electrical supply to light the boiler and let it operate for about 10 minutes to stabilise the burners. Check the pressure and if it differs noticeably from that given in Table 1 for the appropriate boiler size adjust it as follows:

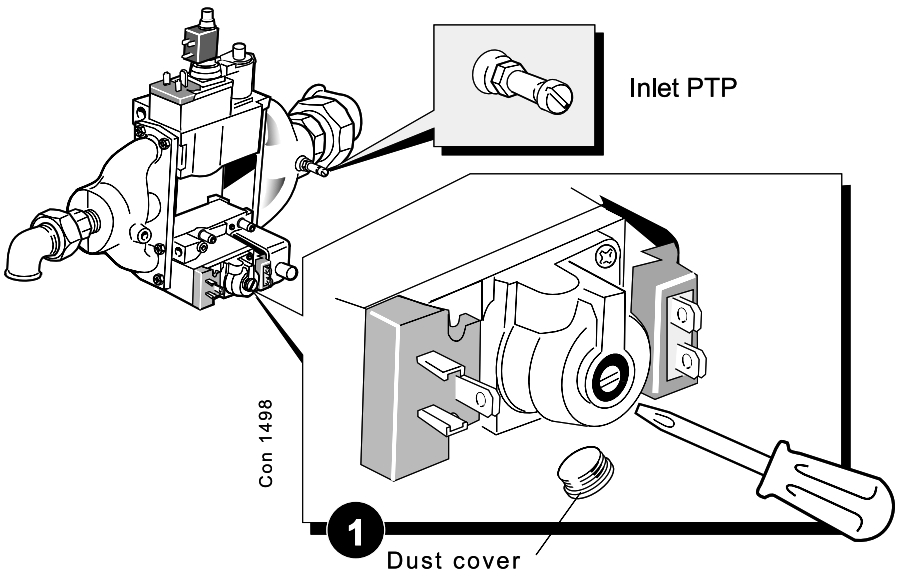

1. Remove the dust cover from the adjustment screw in the bottom valve and gently screw the adjustment *in* fully.
2. Remove the dust cover from the adjustment screw on the top (high/low) valve and, using a hexagon spanner or equivalent.
3. Screw the adjuster gently fully in. Then screw the adjuster out until the burner pressure is approximately 11.5 mbar.
4. Finally screw *out* the adjustment on the bottom valve until the burner pressure is correctly set to the value given in Table 1.
5. After setting, allow the boiler to operate for 3 minutes to stabilise then recheck the setting.

   Note. CXSi 180 only.
   Do not adjust the middle valve, which is factory set.
6. Turn the boiler thermostat knob to OFF.
7. Disconnect the 'high' solenoid plug from the top valve.
8. **CXSi 180 only.** Disconnect one solenoid plug from the middle gas valve.
9. Disconnect one solenoid plug from the bottom valve.
10. Turn the boiler on and set the low pressure to the value given in Table 1, using the low rate adjustment screw (3) inside the spindle of the top valve.
11. Turn the appliance off and reconnect all the solenoid plugs.

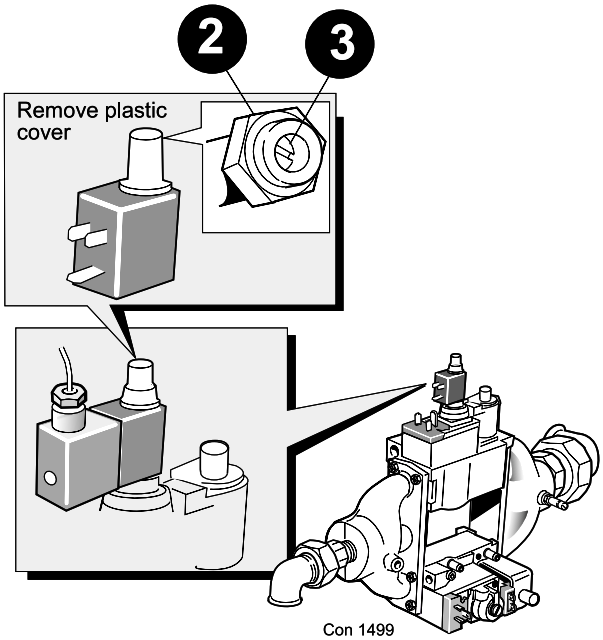

Do not overtighten the solenoid plug fixing screws.

12. Refit the dust cover over the adjustment screws and refit the pressure test point screw.
13. Check for gas soundness.

22 SPILLAGE CHECK

Check that there is no spillage of combustion products from the boiler draught diverter by carrying out a spillage test, as detailed in BS. 5440:1.

23 TESTING

Check the main burner responds correctly to manual on/off operations of any controls fitted in the gas control circuit.

Check the operation of the flame failure safety system by lighting the boiler and then turning the gas inlet cock off.

The Burner On light will go out and the controls will try to relight the boiler. After a period of about 5 seconds, the Lockout light will be illuminated.

Turn on the gas cock again and press in and release the Lockout button. The boiler will relight.

Important Commissioning / Operating Instructions:
Do not operate this appliance for long periods or take any combustion readings with the casing or any part of the casing removed.

24 ADJUSTMENT OF WATER FLOW RATE THROUGH THE BOILER

When commissioning the heating/domestic hot water system the shunt pump must be adjusted to give the minimum flow rate given in Table 4, when that part of the system intended to be used for dissipation of residual heat only is in operation.

25 HANDING OVER

ROUTINE OPERATION

Full instructions covering routine lighting and operation of the boiler are given on the Lighting and Operation Instruction Label located on the inside of the casing door.

Draw the attention of the boiler owner or his representative to the Lighting and Operating Instruction Label on the inside of the front panel. Give a practical demonstration of the lighting and shutting down of the boiler.

Describe the function of the boiler and system controls and show how they are adjusted and used.

Hand over these and the User's Instructions to the customer and request him to keep them in a safe place for ready reference.

IMPORTANT. Point out to the owner that the boiler must have regular maintenance and cleaning, at least annually, in order to ensure reliable and efficient operation. Regular attention will also prolong the life of the boiler and should preferably be performed at the end of the heating season.

Recommend that a contract for this work should be made with a CORGI registered engineer.

SERVICING

26 SERVICING

Caradon Plumbing Limited does not accept any liability resulting from the use of unauthorised parts or the repair and servicing of appliances not carried out in accordance with the Company's recommendations and specifications.

A comprehensive service should be carried out at least once a year. The User is advised to make a contract with a CORGI registered engineer.

WARNING. ALWAYS turn *OFF* the gas supply at the gas cock and disconnect the electricity supply to the appliance BEFORE servicing or replacing any components.

If access is required to the electrical plug-in terminals at the back of the control box then remove the casing top panel; *it is not advisable to try and remove the control box back panel from the boiler with the plugs in place.*

CLEANING THE BOILER

Remove the casing door panel. Lift and remove the casing lower front panel. Undo and pull off all the plugs from the gas valve solenoids. Turn off the gas at the gas inlet cock. Undo the 2 unions at either side of the gas valve assembly and remove the assembly complete.

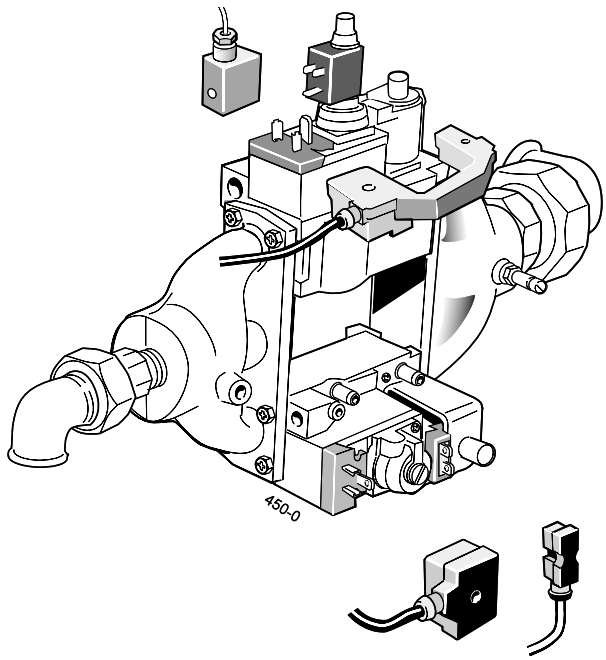

27 SERVICING - continued

Pull off the leads to the spark electrode on the RH end burner - access via the side of the combustion chamber. Pull off the lead to the flame detector electrode at the LH end burner.

Lift off the casing top panel. Undo the 3 elongated nuts from each of the NOx ducts and remove all the ducts. Undo the M5 nuts and washers retaining the burner light back shield and remove it. Undo the four M6 nuts and washers securing the burner tray and carefully pull it from the boiler, ensuring that ***no wires are trapped.*** Undo the screws securing the cleanout cover(s) and remove. Lift out the flue baffles.

Remove all loose deposits from the heat exchanger (especially from between the fins), using the brush provided, and remove all debris from the combustion chamber floor - take care not to damage the insulation.

Examine the burner assembly. Clean the burner bars by brushing them down with a stiff bristle (not wire) brush. Check each bar carefully to ensure that all flame ports are clear, that there are no cracks and that all surfaces are free from accumulated deposits.

If available, an industrial vacuum cleaner may be useful to assist in this work. When cleaning the burner bars, take care to avoid damage from rough handling to the ignition or detection electrodes.

Inspect the ignition and detection electrodes.

Ensure that they are clean and in good condition. In particular, check that:

1. The ignition electrode shield and base fixing screws are tight.
2. The electrodes are correctly positioned .
3. Check that the gap between the electrode tips is 4mm.
4. Reassemble in reverse order. Ensure that no wires are trapped when replacing the burner tray. Refit the flue baffles, cleanout cover, light back shield, NOx ducts, electrode connections and casing panels.
   When refitting the plugs to the gas valve solenoids do NOT overtighten the fixing screws.

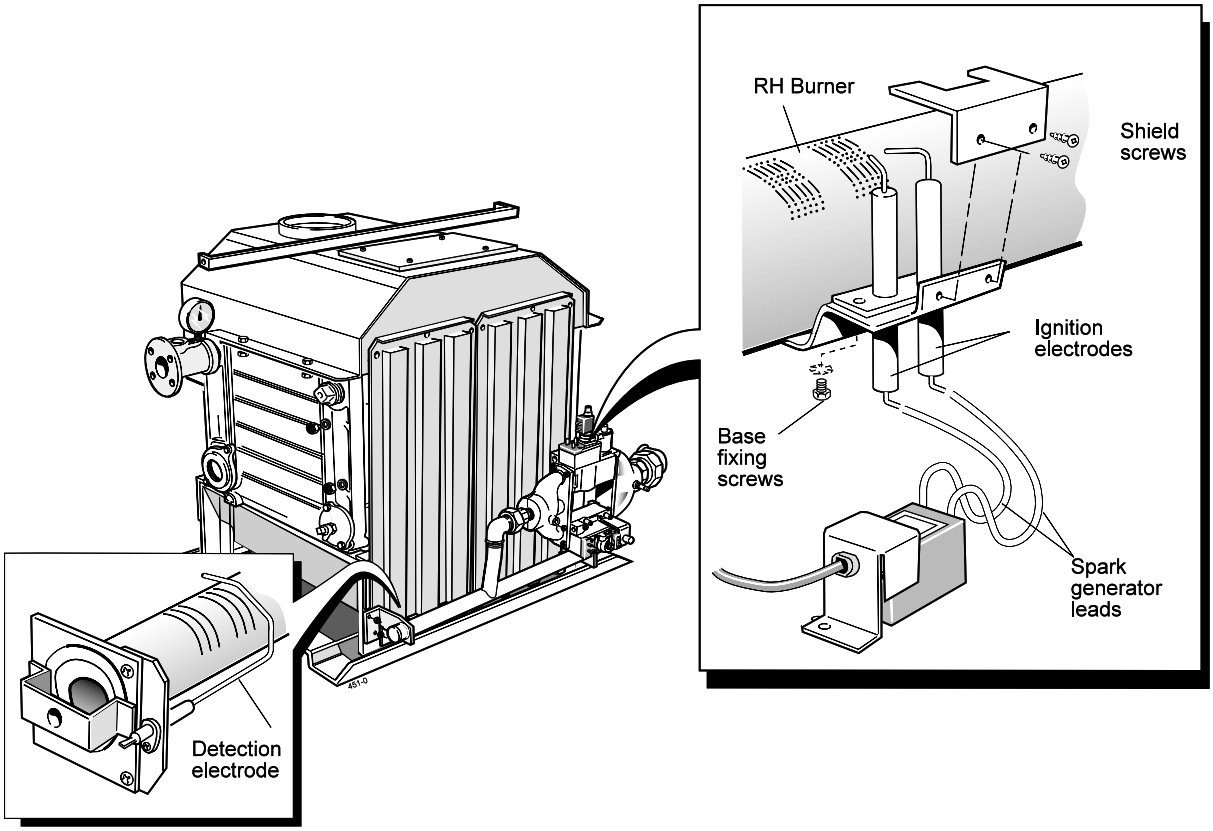

28 REPLACEMENT OF COMPONENTS - Refer to Frames 5, 31 and 32

GENERAL

WARNING. ALWAYS turn OFF the gas supply at the gas inlet cock and switch OFF and DISCONNECT the electricity supply *BEFORE* working on the appliance.

29 GAS CONTROL VALVE

1. Undo and pull off all the plugs from the gas valve solenoids.
2. Turn off the gas at the gas inlet cock. Undo the 2 unions at either side of the gas valve assembly and remove the assembly (complete) to a suitable working area.
3. In order to be able to remove the faulty gas valve it will be necessary to slacken or remove all the screws on either the inlet or the outlet manifold and *only* those 4 screws securing the faulty gas valve on the other manifold. The faulty gas valve can then be removed and replaced. Ensure that the arrow on the gas valve points in the direction of flow.
4. Ensure that new ‘O’ ring seals are fitted and that the 'O' ring seals on the remaining gas valves are correctly in place. Ensure that all screws are retightened.
5. Test for gas soundness.
6. Recommission the appliance and set the manifold pressure, as described in Frame 21.

30 MAIN BURNER

1. Remove the burner tray from the boiler, as described in Frames 26-27.
2. Each burner can be removed by lifting it at the back and pushing it backward to clear the injector. Disconnect the spark electrode assembly and heat shield from the RH burner (or the flame detector electrode from the LH burner), as necessary.
3. Reassemble in reverse order.

31 BURNER AND CONTROLS ASSEMBLY - Exploded View - CXSi 110-160

LEGEND

1. Main gas inlet cock.
2. Gas inlet union.
3. 'O' ring seal.
4. Gas control valve
5. Gas control valve.
6. Spark generator.
7. Burner manifold.
8. Main injector.
9. Main burner.
10. Main burner RH.
11. Ignition electrodes.
12. Detection electrode assembly.

PTP Pressure test point.

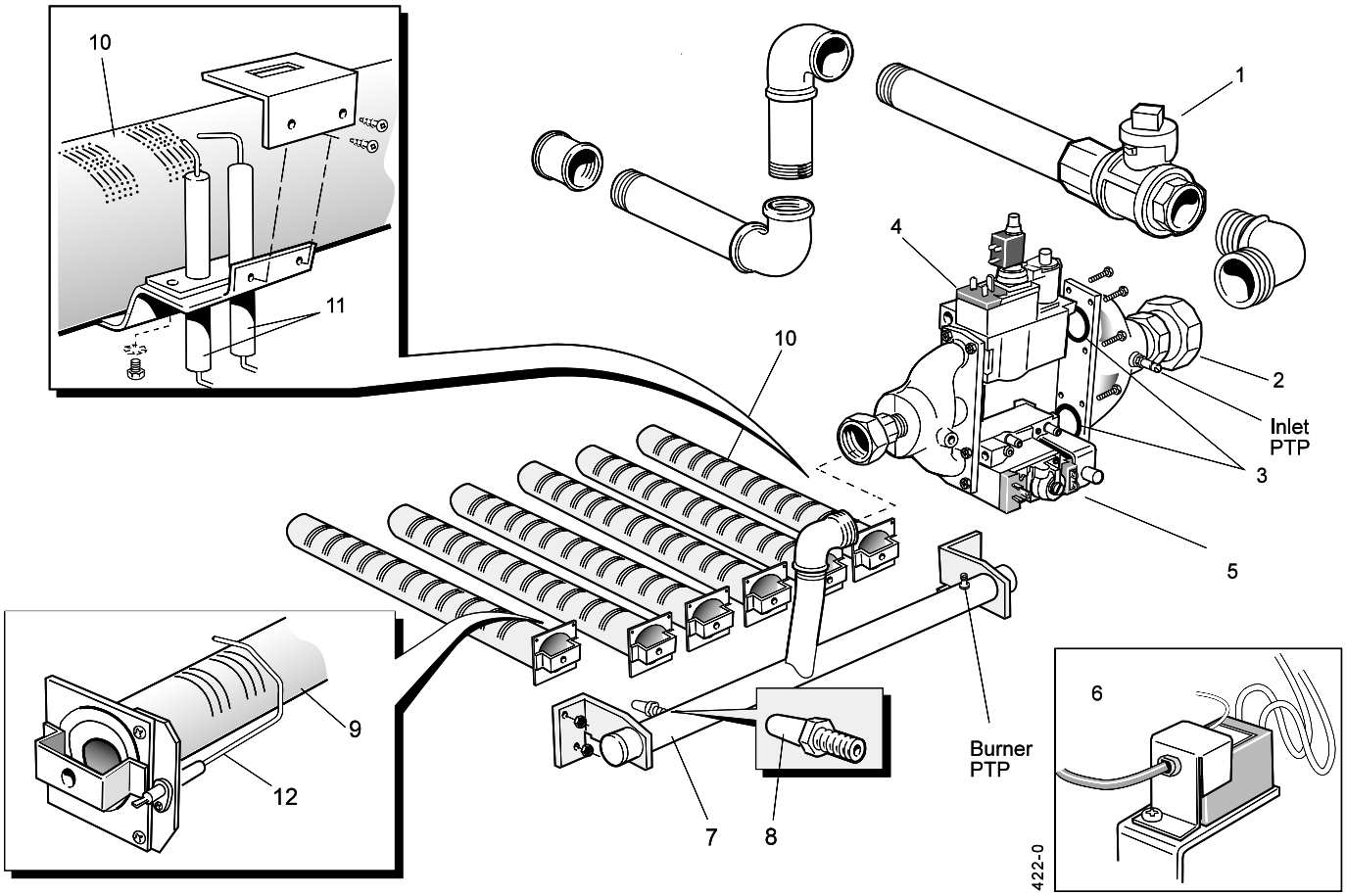

32 BURNER AND CONTROLS ASSEMBLY - Exploded view - CXSi 180

LEGEND

1. Main gas inlet cock.
2. Gas inlet union.
3. 'O' ring seal.
4. Gas control valve.
5. Gas control valve.
6. Spark generator.
7. Burner manifold.
8. Main injector.
9. Main burner.
10. Main burner (RH).
11. Ignition electrodes.
12. Detection electrode assembly.

PTP Pressure test point.

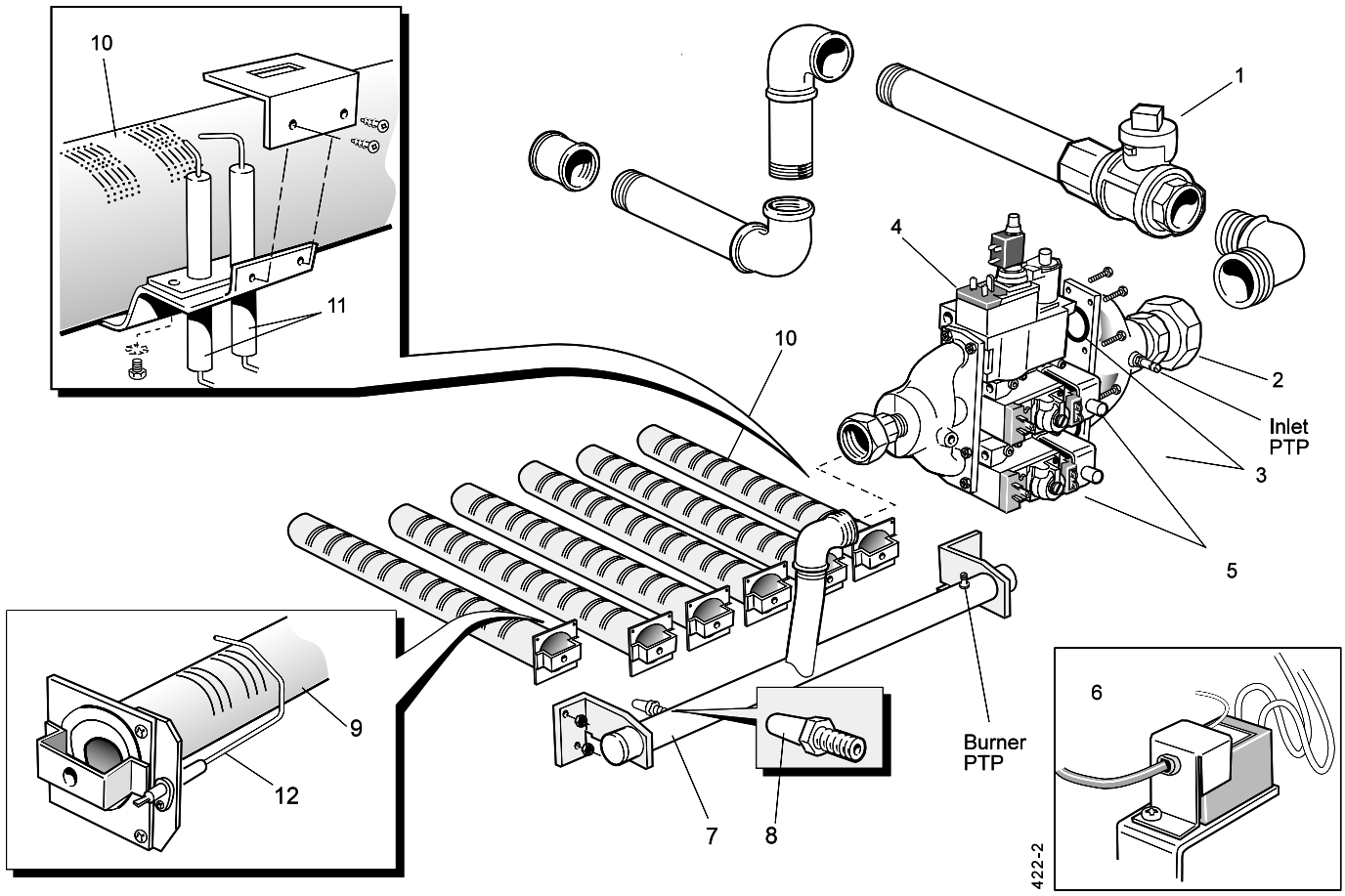

33 OVERHEAT THERMOSTAT

1. Pull out the spring clip in the thermostat pocket in the flow header and pull out the overheat thermostat phial and capillary.
2. Ensure that the electrical supply is switched OFF.
3. Lift off the casing front panel and top panel.
4. Unclip the capillary from its clips on the casing panels.
5. Undo the 2 screws securing the overheat thermostat assembly and withdraw the assembly.
6. Undo the backnut and the 2 M3 screws and remove the top bracket.
7. Remove the wires and reconnect them to the new thermostat body, as follows:

   1. Pink **2. White** **3. Red**

   Reconnect the earth terminal.

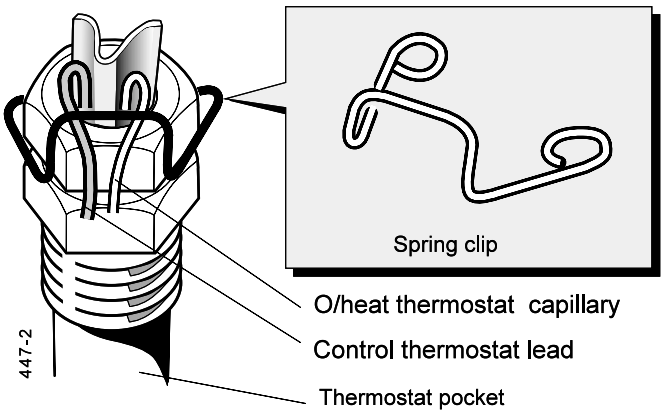

8. Reassemble in reverse order, ensuring that the thermostat connections are facing front before fitting the top bracket and that the capillary goes through the slot in the top panel.

   Ensure that the thermostat capillary is re routed through the casing side panel clips and that the phial is secure in the pocket fitted to the flow header, using the spring clip.

34 CONTROL BOX - Basic Boiler, Exploded View

Printed circuit board support detail

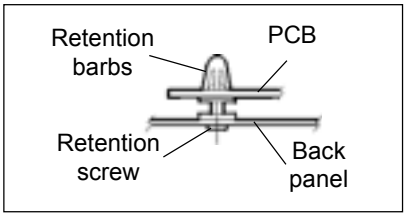

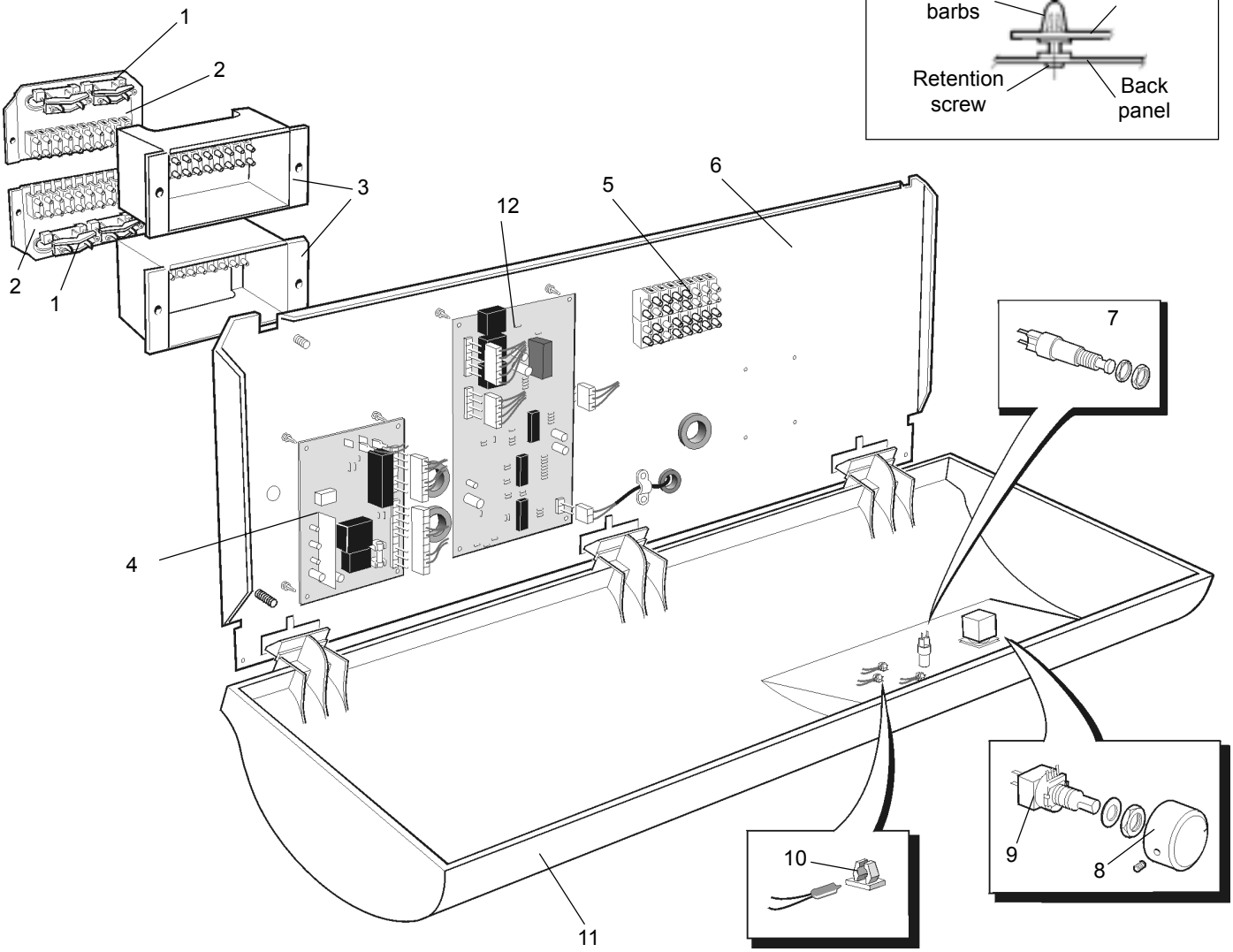

LEGEND

1. Wiring clamp.
2. Connection box plug.
3. Connection box.
4. PCB S456B1047
5. Terminal strip
6. Back panel
7. Lockout reset button
8. Thermostat knob
9. Potentiometer
10. Warning light lens
11. Controls box
12. PCB W 4115A1020

35 CONTROL SENSOR

1. Lift off the casing top panel and front panel.
2. Trace the sensor lead to the pocket in the flow header, remove the spring clip and remove the sensor phial.
3. Undo and remove the 2 screws securing the control box front panel. Carefully lift up and lower it.
4. Pull out the sensor plug from the PCB and remove the strain relief bush. Remove the sensor and lead.
5. Fit the new sensor, ensuring that the lead is routed along the casing in the clips provided.
6. Re-assemble in reverse order.

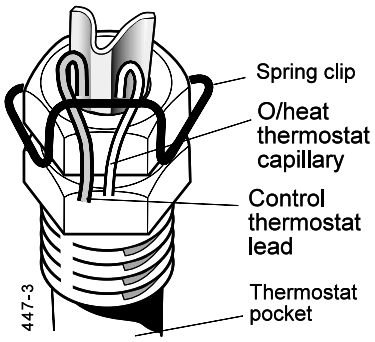

36 CONTROL SENSOR POTENTIOMETER ASSEMBLY

1. Prise the front cap from the thermostat knob.
2. Carefully loosen the brass retaining nut one full turn anticlockwise
3. Gently pull the thermostat knob from the potentiometer. When reassembling ensure the arrow on the body is lined up in the OFF position.
4. Remove the back nut and brass washer securing the thermost knob to the panel.
5. Undo and remove the 2 screws securing the control box front panel. Carefully lift it up and lower it.
6. Remove the terminal plugs from the back of the potentiometer.
7. Undo the purse clips holding the wires from the potentiometer to the PCB then pull the wires out.
8. Remove the connections from the PCB.
9. Fit the new potentiometer and reassemble in reverse order. Ensure that the connections to the back of the potentiometer are made either to the top 2 tags or the bottom 2 tags and that the lug on the body of the potentiometer locates through the hole in the front panel of the control box.

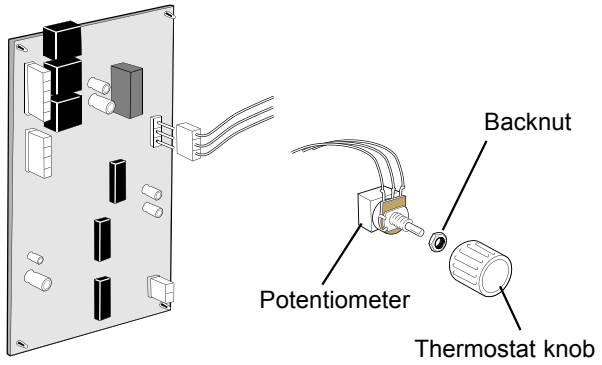

Also ensure that the potentiometer is rotated fully anticlockwise and clicks before commencing the reassembly.

37 PC BOARD S4561B1047

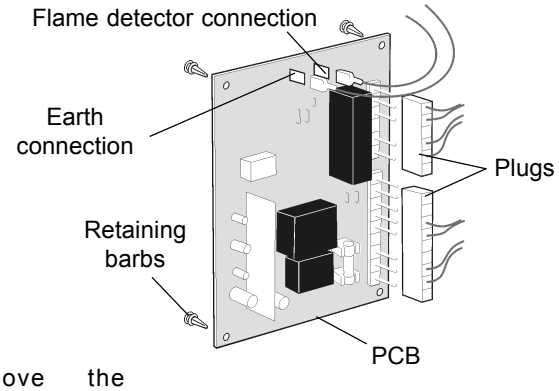

1. Remove the lower front panel.
2. Undo and remove the 2 screws securing the control box front panel. Carefully lift it up and lower it.
3. Pull off the 2 plugs and the 2 push-on connections from the board. The board can now be removed by squeezing in the retaining barbs.
4. Fit the new board and reassemble in reverse order, ensuring that the push-on connections are correctly fitted, as follows (from left to right): Earth - flame detector lead.

38 PC BOARD W4115A1020

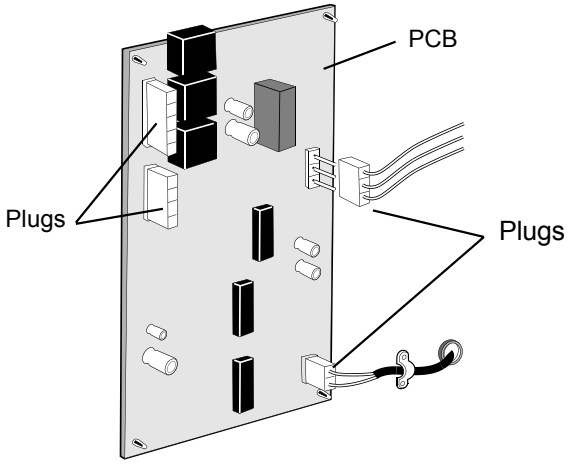

1. Remove the lower front panel.
2. Undo and remove the 2 screws securing the control box front panel. Carefully lift it up and lower it .
3. Remove the 4 plugs from the board. The board can now be removed by squeezing in the retaining barbs.
4. Reassemble in reverse order.

39 COMBUSTION CHAMBER INSULATION REPLACEMENT

The insulation boards used in the combustion chambers of these products contain man-made fibres, refractory fillers, organic and inorganic binders and as such are deemed to be harmless to humans.

Caradon Plumbing Limited, however, recommend that for your own comfort and to comply with good working practise the procedure described below is followed.

IMPORTANT. Turn OFF the gas and **DISCONNECT** the electricity supply.

To replace the insulation boards the major boiler components (including the heat exchanger and burners) have to be removed to gain access to the combustion chamber.

Prior to removal of the boards the following protective equipment should be worn:

- Face mask supplied with the spare part.
- Gloves supplied with the spare part.

1 Damp down the combustion chamber area containing the insulation boards.

2. Remove the insulation boards. The replacement boards are supplied in a plastic bag. This bag should be retained and the discarded boards should now be placed into it.
3. Sweep any dampened particles and place in the plastic bag.
4. Fit new insulation boards.
5. Remove the gloves and face mask and place them in the plastic bag.
6. Wash your hands and any areas of skin which may have come into contact with any of the particles from the insulation board.
7. Seal the plastic bag and dispose of it and its contents into a commercial tip.

40 BOILER CONTROL

Before attempting any electrical fault finding ALWAYS carry out the preliminary electrical system checks as detailed in the Instructions for the British Gas Multimeter or other similar commercially available meter.

The preliminary electrical system checks are the FIRST electrical checks to be carried out during a fault finding procedure.

On completion of any service/fault finding task which has required the breaking and remaking of electrical connections the following checks MUST be repeated:

a. Earth continuity

b. Polarity

c. Resistance to earth

Detailed instructions on the replacement of faulty components are contained in the 'Servicing' section of these Installation & Servicing Instructions.

GENERAL INFORMATION

Anti-cycle will be in operation each time the boiler thermostat is satisfied and a rapid demand for heat is required. The same situation will occur if the external controls operate rapidly. This feature reduces component wear and ensures continuous trouble free operation. The anti-cycle duration is 4 minutes.

If the system pump, with a maximum current of 3A, is connected to the boiler pump terminals, pump overrun will be in operation when the demand for heat is satisfied, and will continue to run for 6 minutes.

Frost protection is inbuilt with the boiler. If the flow temperature falls to approximately 5 °C then the boiler will operate until the flow temperature exceeds 18 °C. Note that it is designed to protect the boiler and may not protect remote parts of the system. Neither the pump overrun nor the inbuilt frost protection will operate if the boiler thermostat is switched OFF.

The gas valves operate on High/Low and Off principle. The boiler will start at low rate and after 3 minutes the high rate gas valve will open. On reaching the set point, determined by the user, the boiler will go to low rate and when the temperature reaches the set point plus 3 °C the low rate gas valve will close. Should the temperature fall below the set point the boiler will go back to the high rate.

The full sequence control enables a single ignition attempt lasting about 5 seconds and will go to lockout if detection does not take place.

41 SIMPLE FLOW CHART OF OPERATION

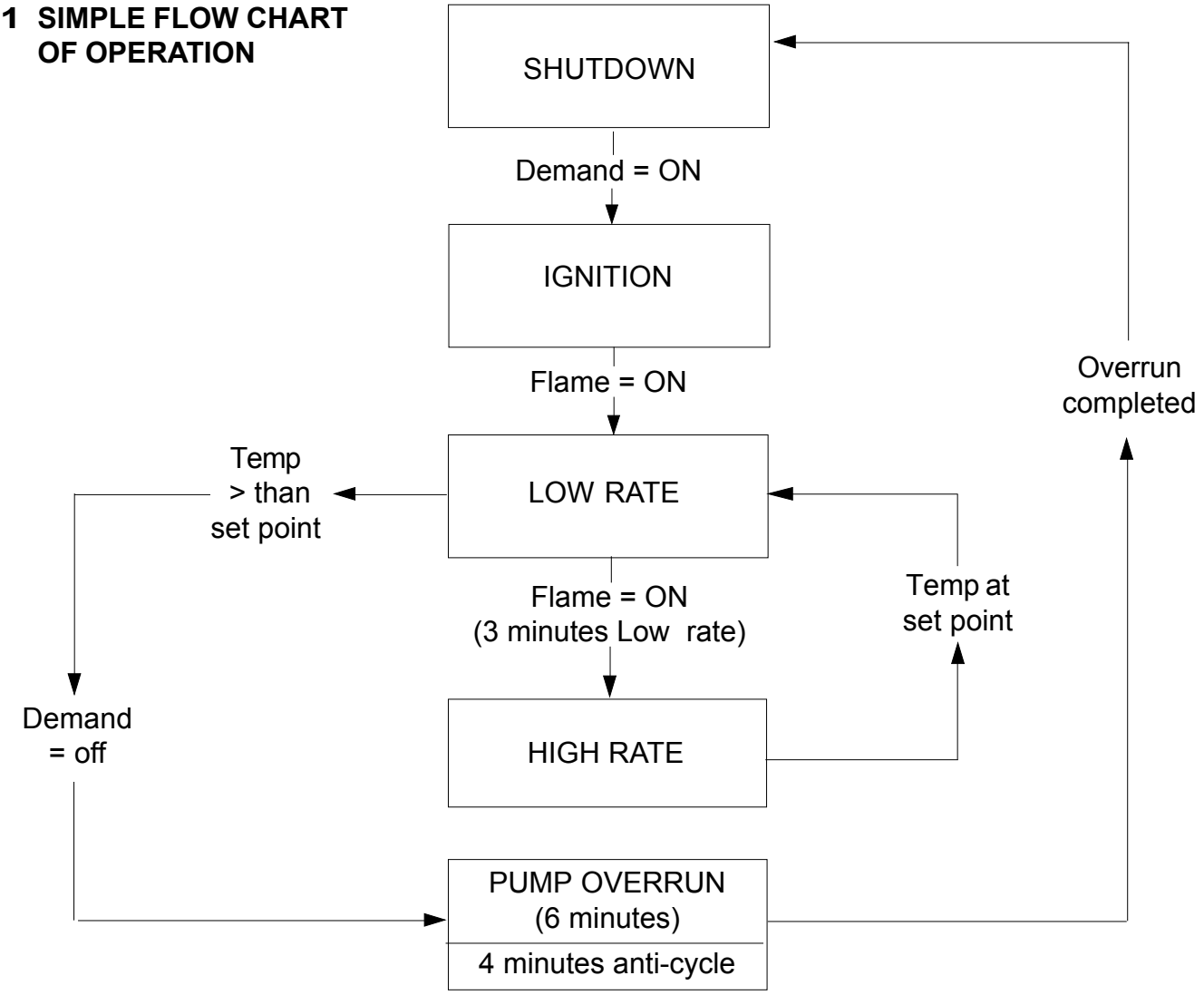

Before carrying out any Fault Finding, ensure that all internal controls are calling for heat and that the overheat thermostat has not operated. There should be 230V ± 10% available at the control box connection.

42 BOILER DOES NOT LIGHT

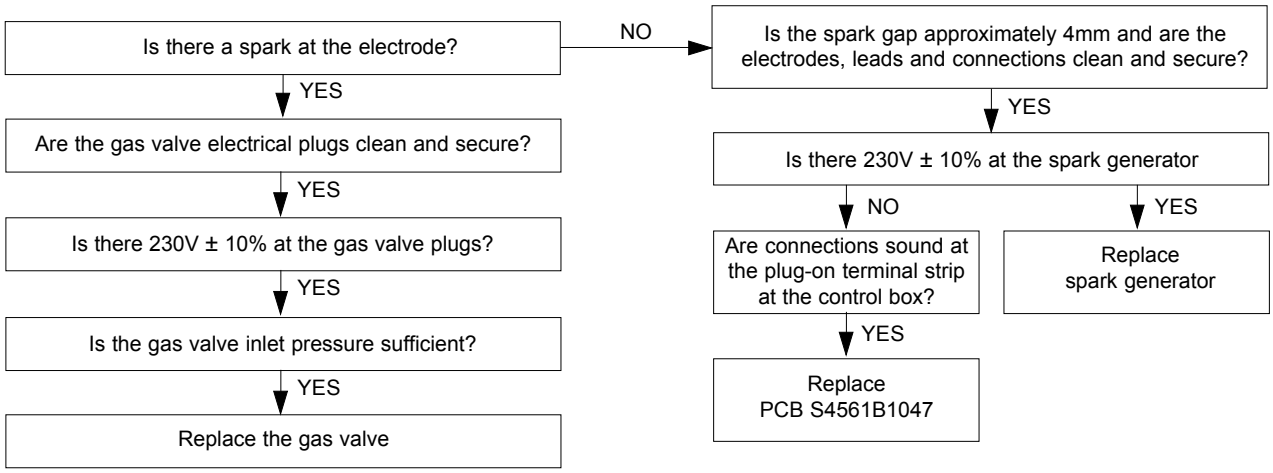

43 BOILER LIGHTS BUT GOES TO LOCKOUT

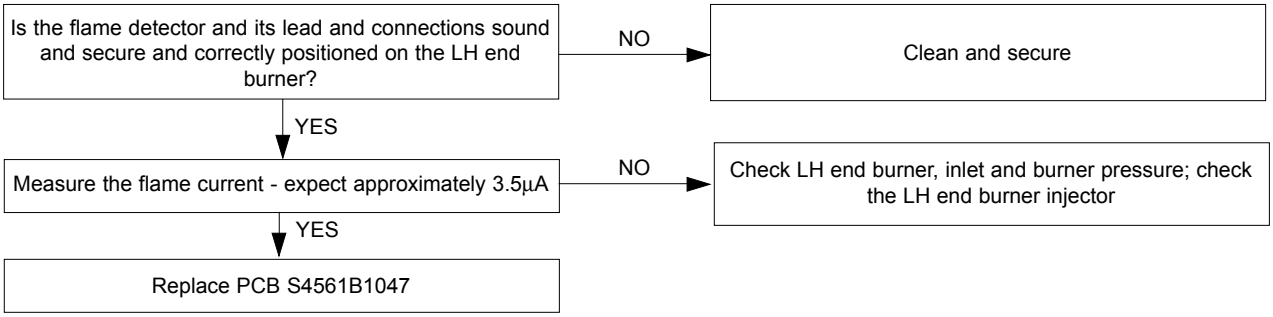

44 BOILER GOES OUT ON OVERHEAT THERMOSTAT

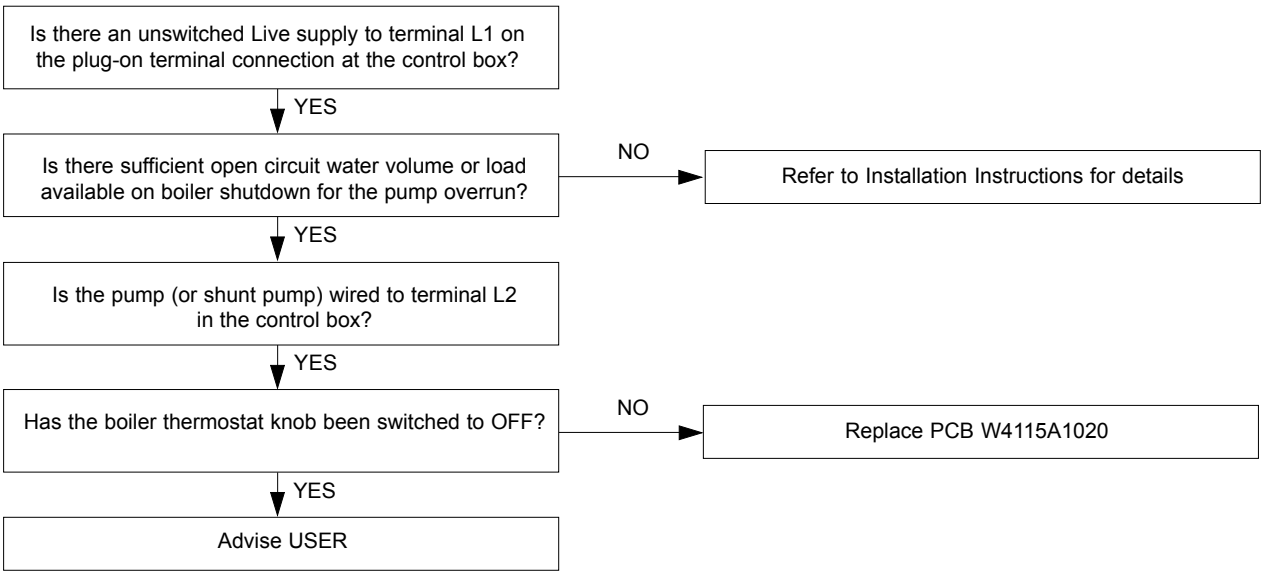

SHORT LIST OF PARTS

The following are parts commonly required as replacements, due to damage or expendability.

Their failure or absence is likely to affect the safety and/or performance of this appliance.

When ordering spare parts please quote:

1. Boiler model
2. Boiler serial no. (refer to the data plate on the combustion chamber)
3. Boiler P.I. No. (refer to the data plate on the combustion chamber)
4. Description
5. Quantity
6. Product no.

Key No.	Description	Qty.	Product No.
	Gas valve		
28	HONEYWELL VR4605PB2003 CXSi 110, 120, 140, 160 & 180	1	111 867
28A	HONEYWELL VR4605A 1104 ..... CXSi 110 & 120	1	138 896
	HONEYWELL VR4605A 1104 ..... CXSi 180	2	138 896
28B	HONEYWELL VR4605AB 1019 ..... CXSi 140 & 160	1	111 869
28C	Plug and lead ..... CXSi 110, 120, 140, 160 & 180	1	154734
28D	Plug and lead ..... CXSi 110, 120, 140 & 160	1	139 269
28E	Plug and lead ..... CXSi 110, 120, 140 & 160	1	112 431
28F	Plug and lead ..... CXSi 110, 120, 140, 160 & 180	1	155 657
28G	Plug and lead ..... CXSi 180	2	111 870
29	Spark generator	1	139 300
31	Injector 4.02 mm diameter ..... CXSi 110	6	013 175
	Injector 4.20mm diameter ..... CXSi 120	6	013 180
	Injector 4.20mm diameter ..... CXSi 140	7	013 180
	Injector 4.20mm diameter ..... CXSi 160	8	013 180
	Injector 4.20mm diameter ..... CXSi 180	9	013 180
32	Flame detection electrode	1	138 895
32A	Flame detection lead	1	139 271
33	Main burners ..... Worgas CXSi 110 & 120	5	139 824
33	Main burners ..... Worgas CXSi 140	6	139 824
	Main burners ..... Worgas CXSi 160	7	139 824
	..... Worgas CXSi 180	8	139 824
34	Main burner (RH end) ..... Worgas CXSi 110 - 180	1	139 825
36	Ignition electrode	1	112 365
45	Control box complete	1	155 641
46	Thermistor	1	154 816
47A	PCB S4561B1047 (ignition)	1	154 814
48A	PCB W4115A1020 (Aquastat)	1	154 815
56	Casing assembly complete ..... CXSi 110 & 120	1	155 653
56	Casing assembly complete ..... CXSi 140	1	155 654
56	Casing assembly complete ..... CXSi 160	1	155 655
56	Casing assembly complete ..... CXSi 180	1	155 656

SHORT LIST OF PARTS

Key No.	Description		Qty.	Product No.
57	Casing front panel	..... CXSi 110 & 120	1	155 647
57	Casing front panel	..... CXSi 140	1	155 648
57	Casing front panel	..... CXSi 160	1	155 649
57	Casing front panel	..... CXSi 180	1	155 650
58	Casing LH side panel	CXSi 110-180	1	076 978
59	Casing RH side panel	CXSi 110-180	1	076 979
60	Casing lower front panel	..... CXSi 110 & 120	1	138 475
60	Casing lower front panel	..... CXSi 140	1	138 474
60	Casing lower front panel	..... CXSi 160	1	138 473
60	Casing lower front panel	..... CXSi 180	1	138 472
61	Casing upper front panel	..... CXSi 110 & 120	1	155 643
61	Casing upper front panel	..... CXSi 140	1	155 644
61	Casing upper front panel	..... CXSi 160	1	155 645
62	Casing top panel	CXSi 110 & 120	1	138 465
62	Casing top panel	CXSi 140	1	138 464
62	Casing top panel	CXSi 160	1	138 463
62	Casing top panel	CXSi 180	1	138 462
63A	Overheat thermostat	RAK77.4/3835	1	153 914
78	Boiler status neons	Boiler ON	1	154 854
79	Boiler status neons	Overheat & Lockout	1	154 855
80	Lockout reset button assembly		1	155 269

Technical Training

The Caradon Plumbing Limited Technical Training Centre offers a series of first class training courses for domestic, commercial and industrial heating installers, engineers and system specifiers.

For details of courses please ring: *01482 498432*

Caradon Plumbing Limited pursues a policy of continuing improvement in the design and performance of its products. The right is therefore reserved to vary specification without notice.

Caradon Plumbing Limited, P.O. Box 103, National Ave, Kingston upon Hull, HU5 4JN. Telephone: 01482 492 251 Fax: 01482 448 858. Registration No. London 322 137. Registered Office: National Avenue, Kingston upon Hull, HU5 4JN. *A subsidiary of Caradon plc.*

October 2000 155 663 A01

Caradon
Plumbing Solutions

Ideal Installer/Technical Helpline: 01482 498376